# Table of Content


01.Cover
02.Content
03.Block Digram
04.DRAM-LPDDR4X_200P_1X32bit
05.CONNECT
06.PCIE-PCIE2.0_Slot-Ekey
07.PCIE-PCIE3.0_Slot-Mkey
08.VI-HDMI2.0 RX
09.USB2HUB
10.RK3588_Power/GND
11.RK3588_OSC/PLL/PMUIO
12.RK3588 DDR Controler
13.RK3588_Flash/SD Controller
14.RK3588_USB30/USB20_Ctrl
15.RK3588_SARADC/1.8V Only GPIO
16.RK3588_MIPI  Interface
17.RK3588_HDMI/eDP Interface
18.RK3588_PCIE30/PCIE20/SATA30
19.RK3588_1.8V/ 3.3V GPIO
20.Power_DC IN
21.Audio Codec-ES8316
22.Power-PMIC_RK806-1
23.Power_Ext Discrete
24.PCIE TO RJ45_RTL8125B
25.Flash-eMMC Flash
26.Flash-TF Card
27.USB20x2 Double Port
28.USB30x2 Double Port
29.Type-C Port
30.VI-Camera_MIPI-CSI
31.VO-HDMI2.1 TX
32.VO-LCM_MIPI

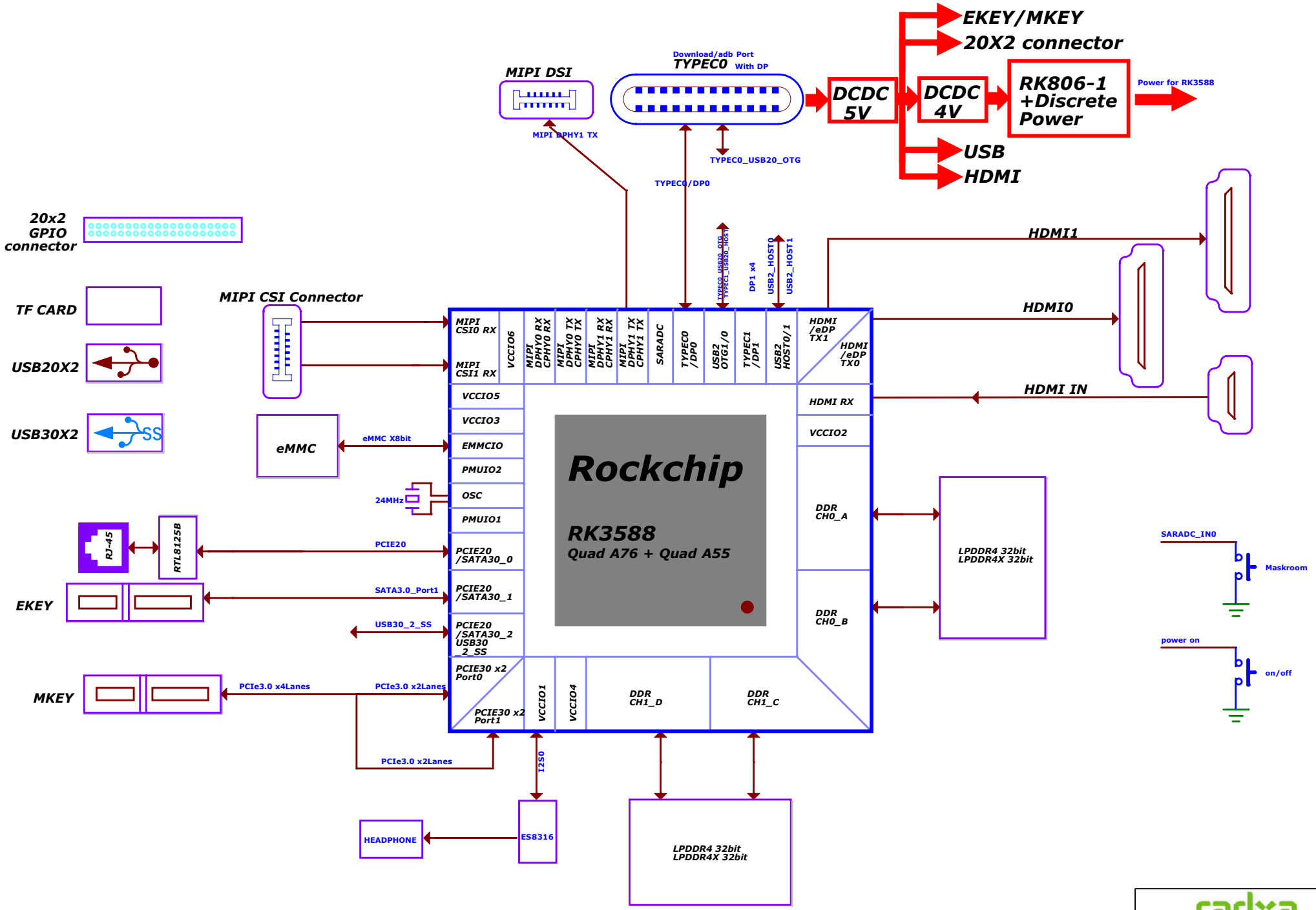


radxa

| Size | Title: | ROCK 5B | REV |
|---|---|---|---|
| A2 | Page Name: | Block Diagram | 1.423 |
| Date: Wednesday, March 01, 2023 | Sheet 3 of 32 | | |

# LPDDR4X

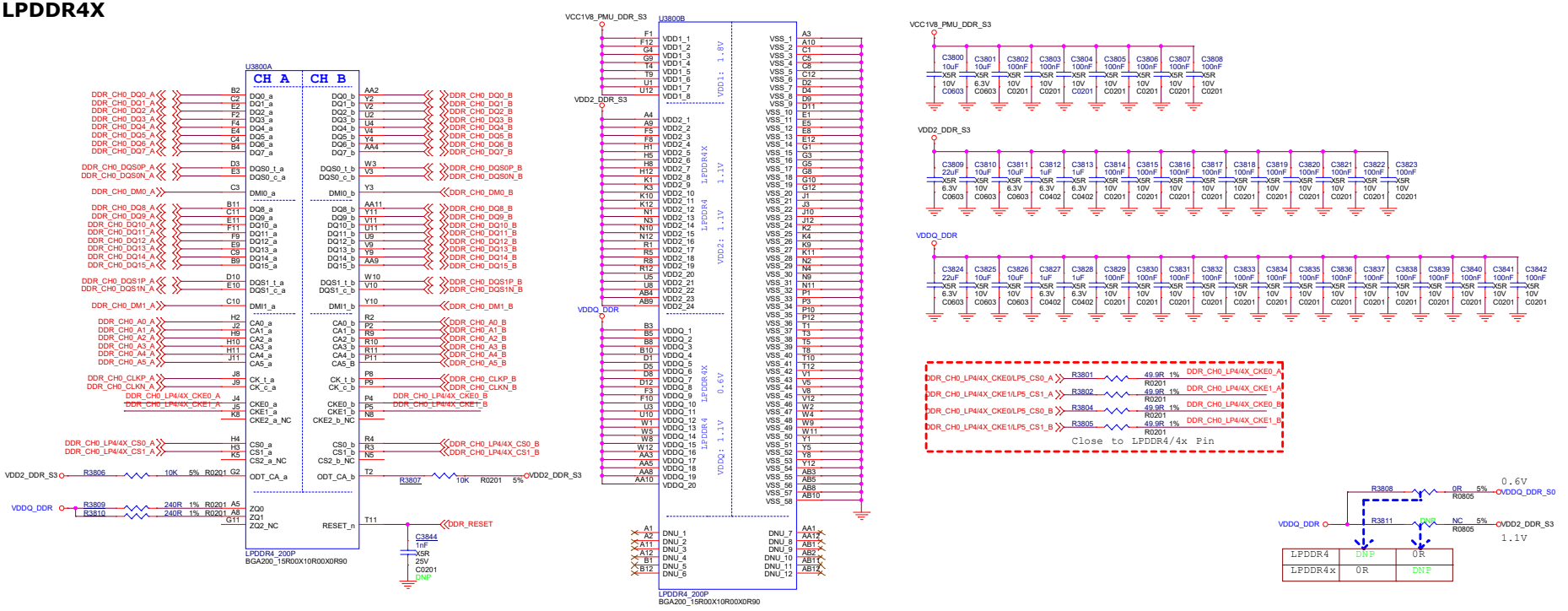


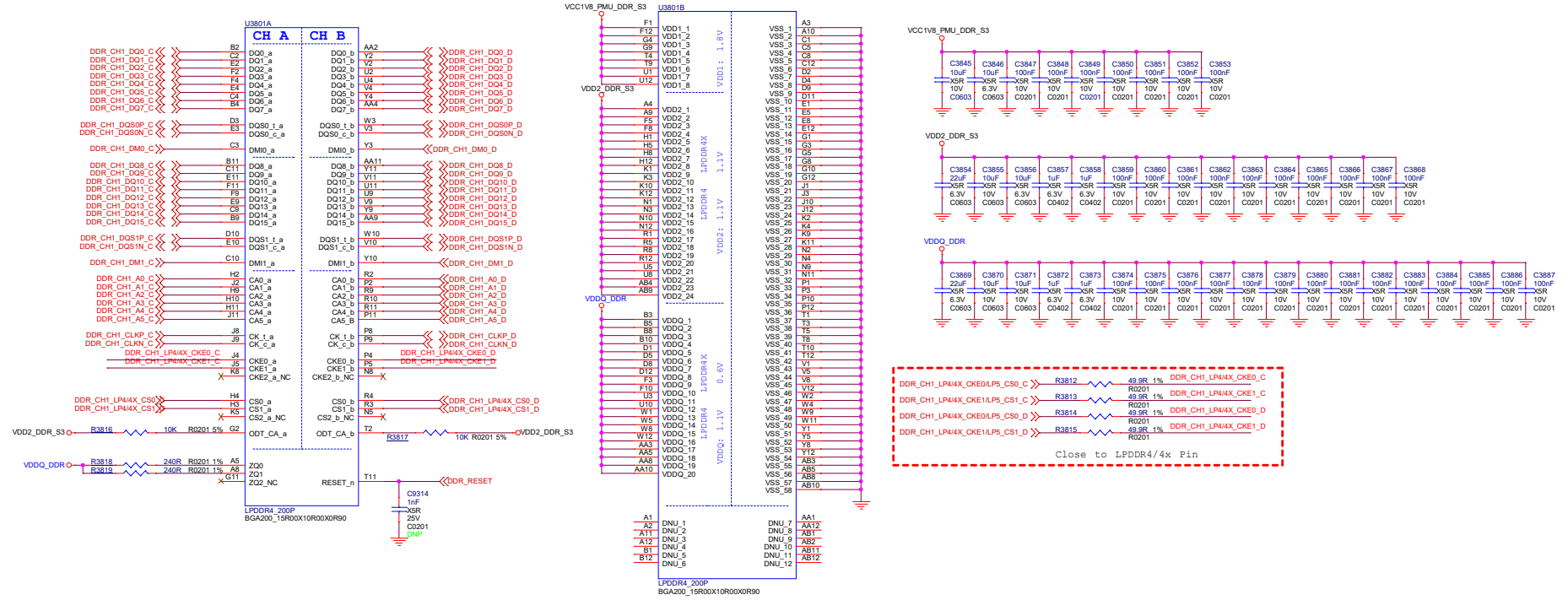


radxa

| Size | Title: | REV |
|---|---|---|
| A2 | ROCK 5B | 1.423 |
| | Page Name: DRAM-LPDDR4X_200P_1X32bit | |
| | Date: Wednesday, March 01, 2023 Sheet 04 of 32 | |

# CONNECT

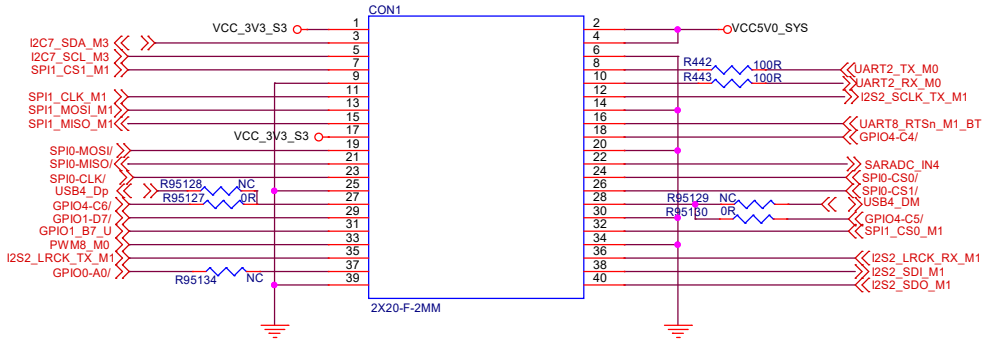


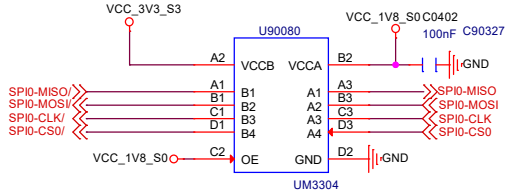


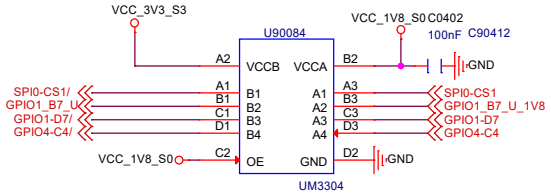


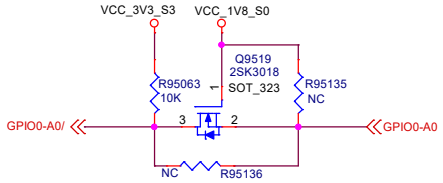


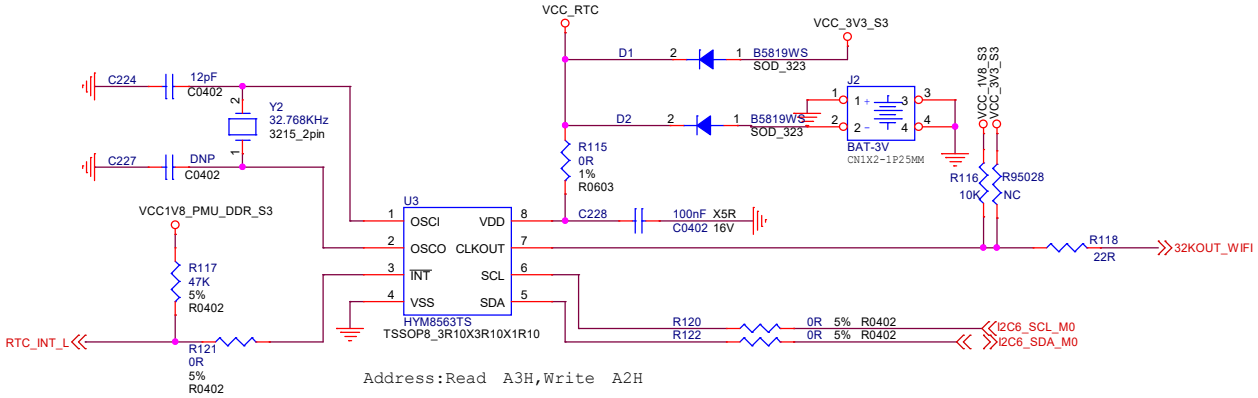


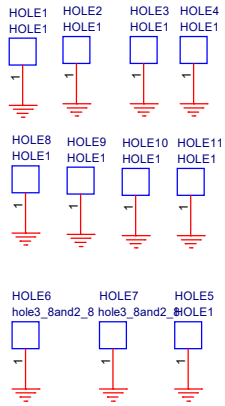


| Size | Title: | REV |
|---|---|---|
| A3 | ROCK 5B | 1.423 |
| | Page Name: CONNECT | |
| Date: Wednesday, March 01, 2023 | Sheet 5 of 32 | |

# PCIE-PCIE2.0_Slot-Ekey

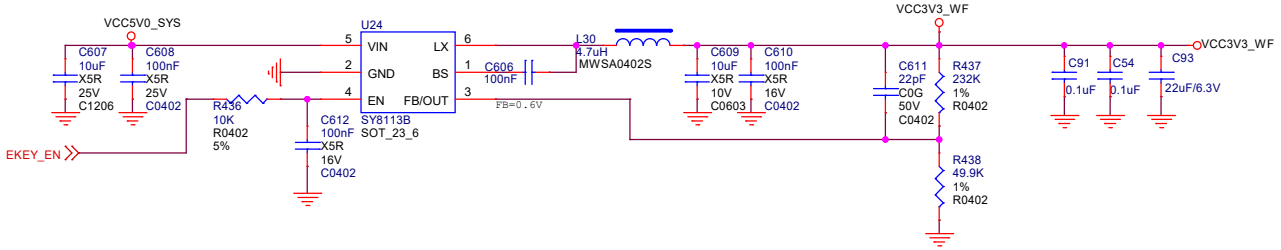


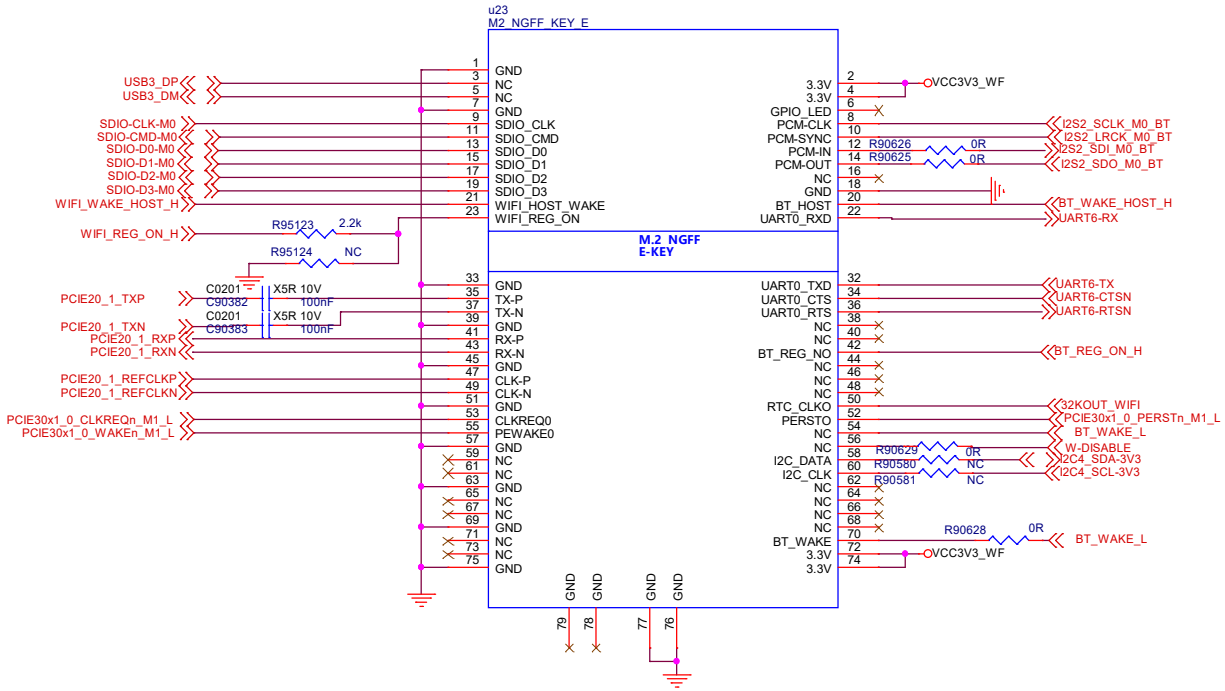


| Size | Title: | REV |
|---|---|---|
| A3 | ROCK 5B | 1.423 |
| | Page Name: PCIE-PCIE2.0_Slot-Ekey | |
| Date: Wednesday, March 01, 2023 | Sheet 6 of 32 | |

# PCIe3.0 x 4 Slot

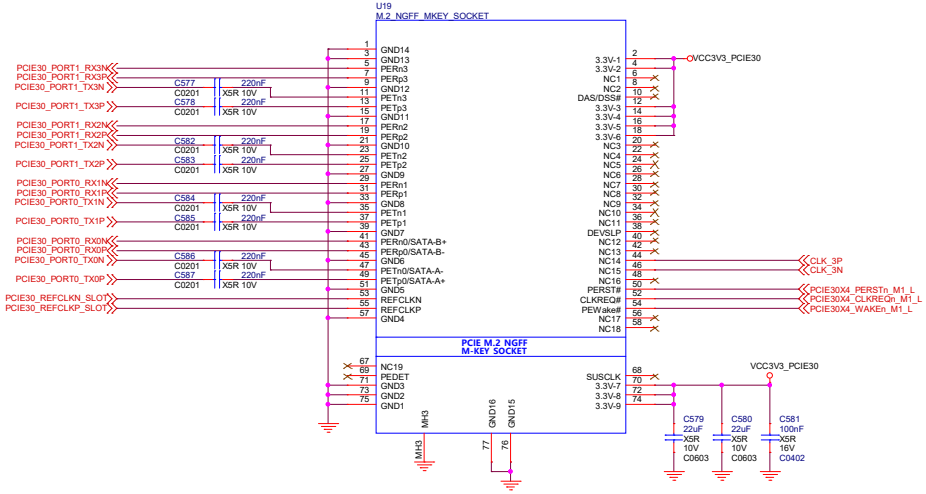


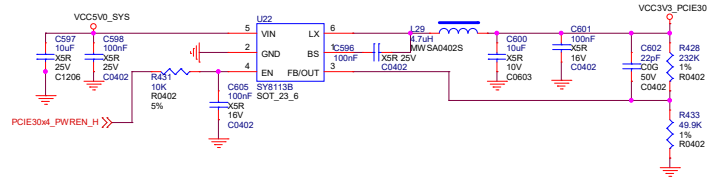


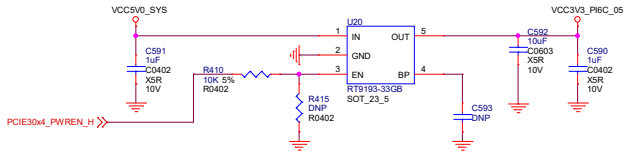


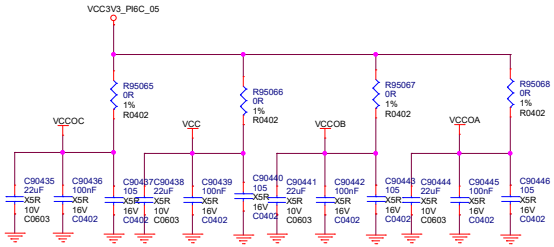


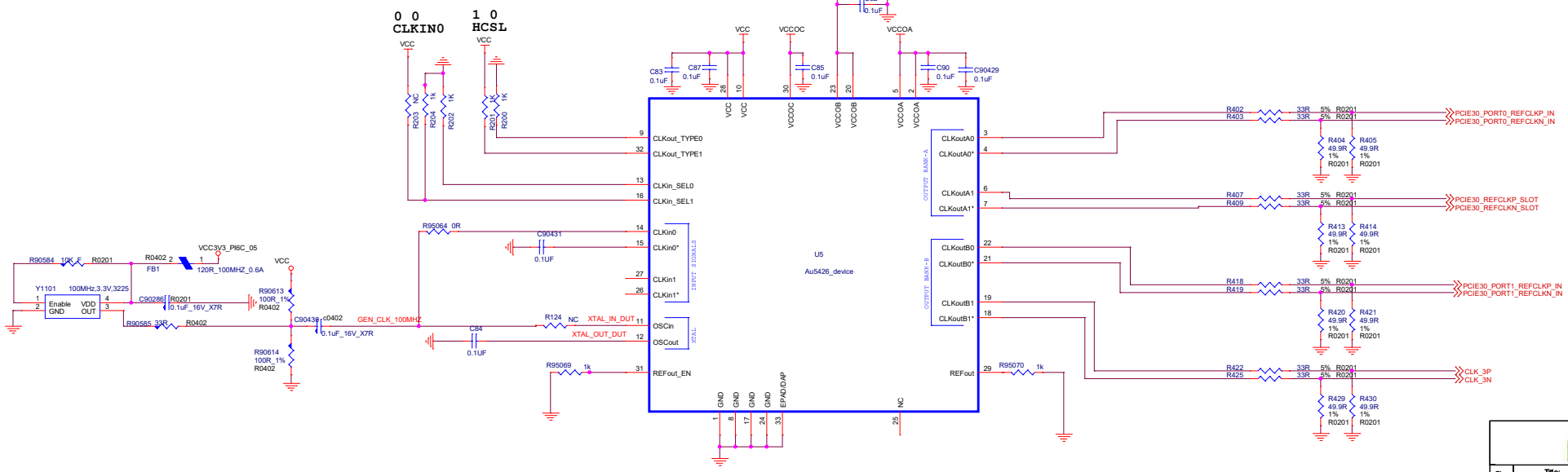


radxa

| Size | Title: | ROCK 5B | REV |
|---|---|---|---|
| A2 | Page Name: | PCIE-PCIE3.0_Slot-Mkey | 1.423 |
| Date: Wednesday, March 01, 2023 | Sheet 7 of 32 | | |

# HDMI2.0 RX

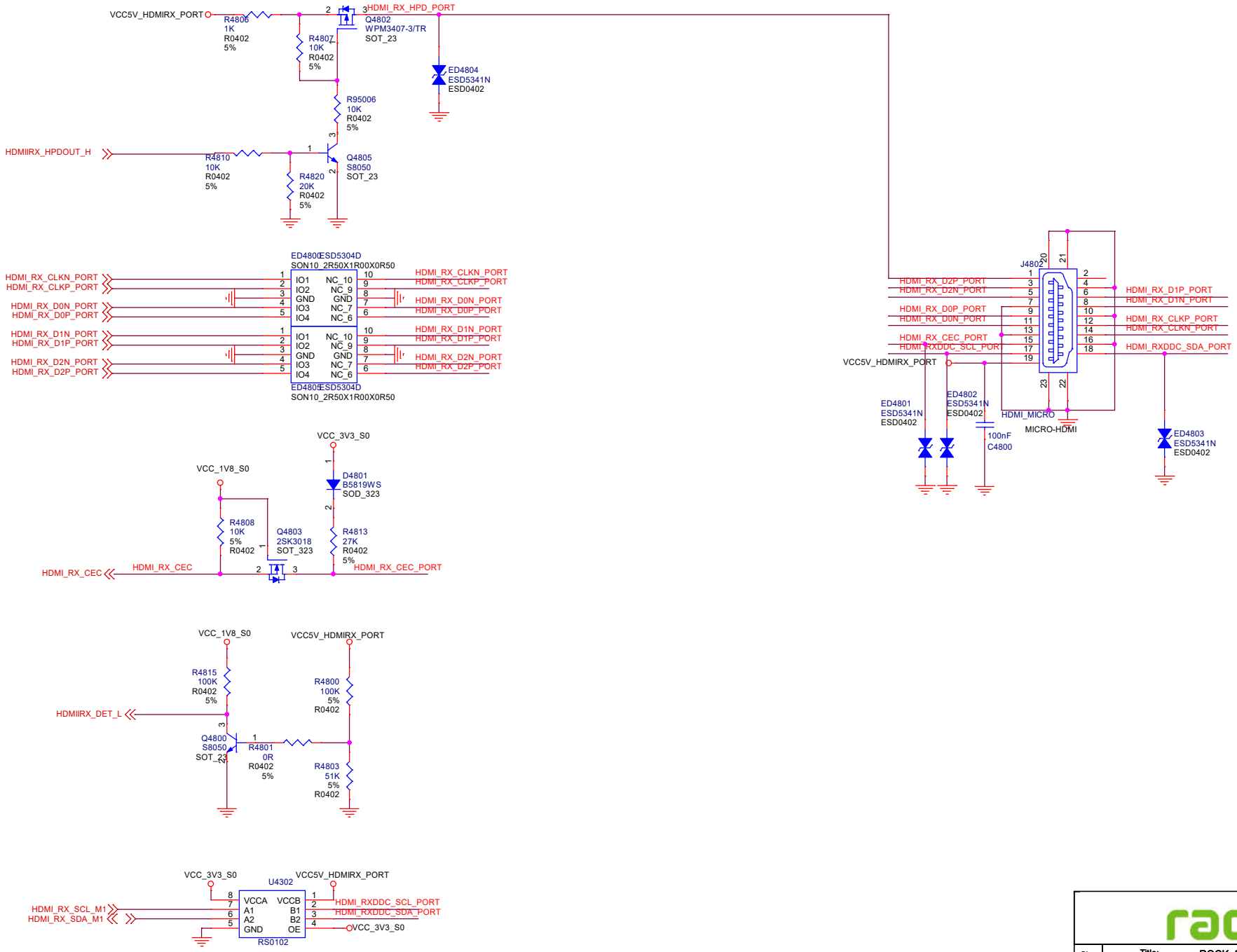


radxa

| Size | Title: | REV |
|---|---|---|
| A3 | ROCK 5B | 1.423 |
| | Page Name: VI-HDMI2.0 RX | |
| Date: Wednesday, March 01, 2023 | Sheet 8 of 32 | |

# USB2HUB

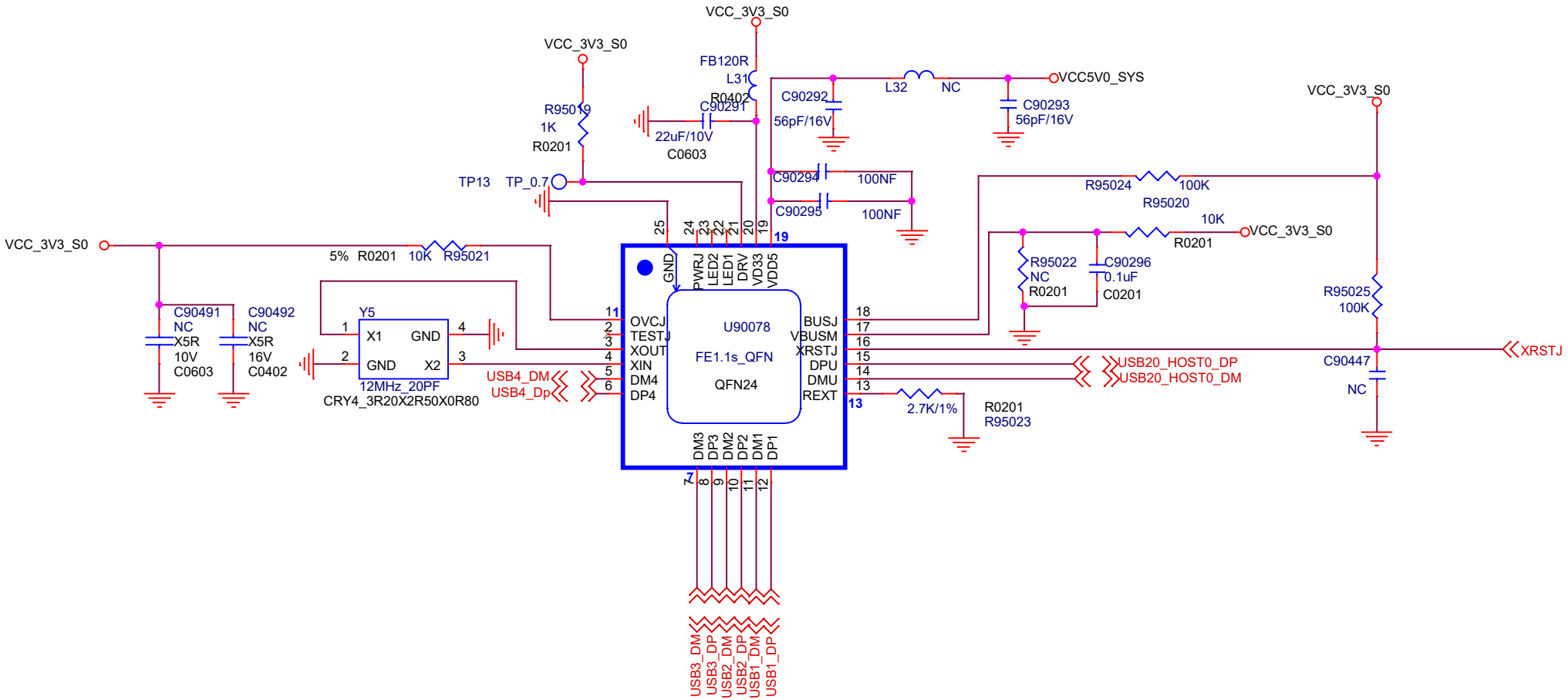


radxa

| Size | Title: | ROCK 5B | REV |
|---|---|---|---|
| A4 | Page Name: | USB2HUB | 1.423 |
| Date: | Wednesday, March 01, 2023 | Sheet 9 of 32 | |

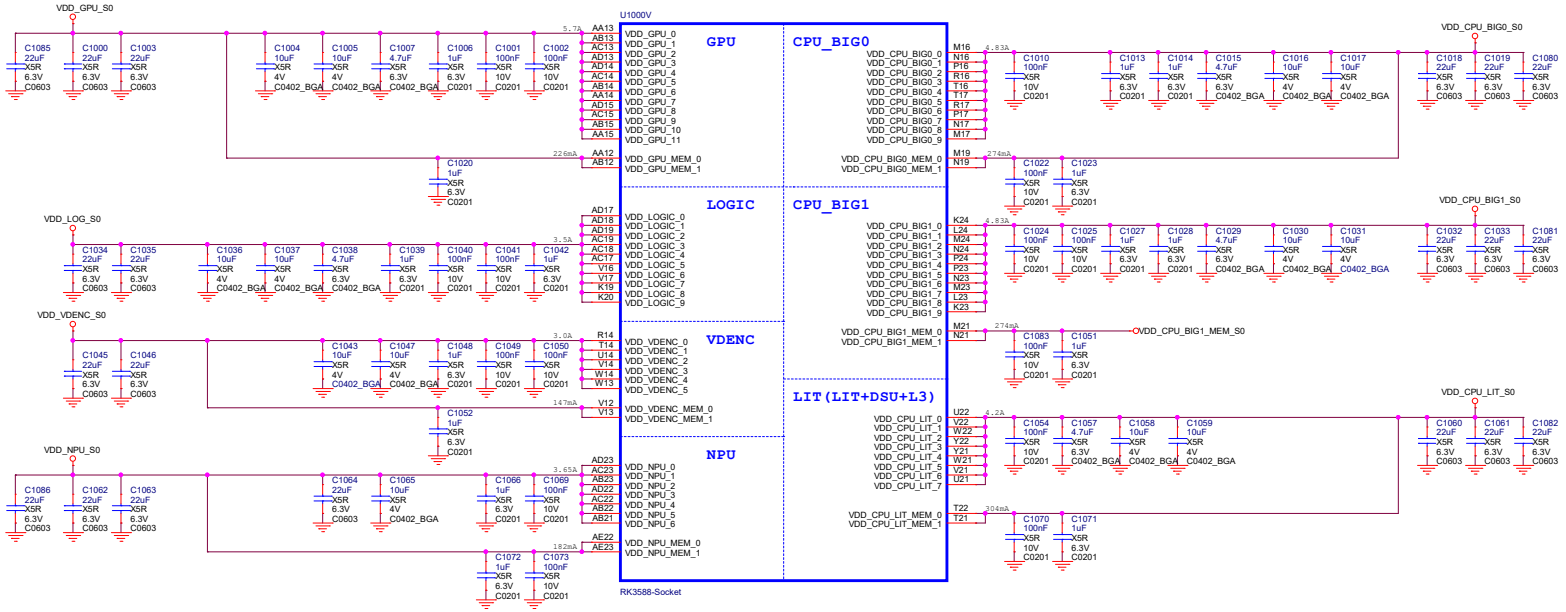


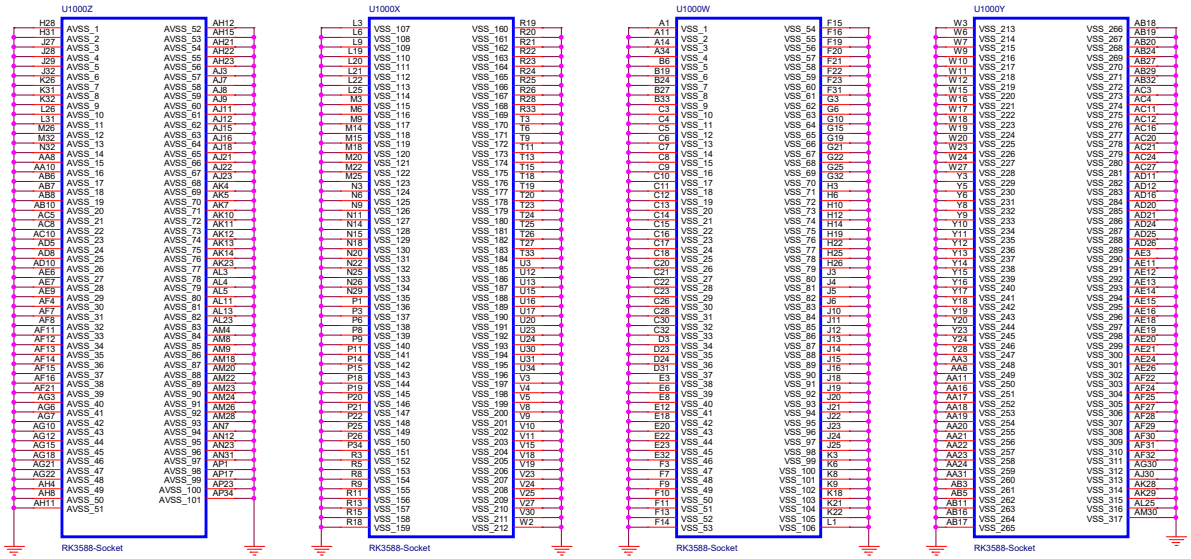


| Size | Title: | REV |
|---|---|---|
| A2 | ROCK 5B | 1.423 |
| | Page Name: RK3588_Power/GND | |
| Date: Wednesday, March 01, 2023 | Sheet 10 of 32 | |

# RK3588_E(OSC/PLL/PMUIO1/2)

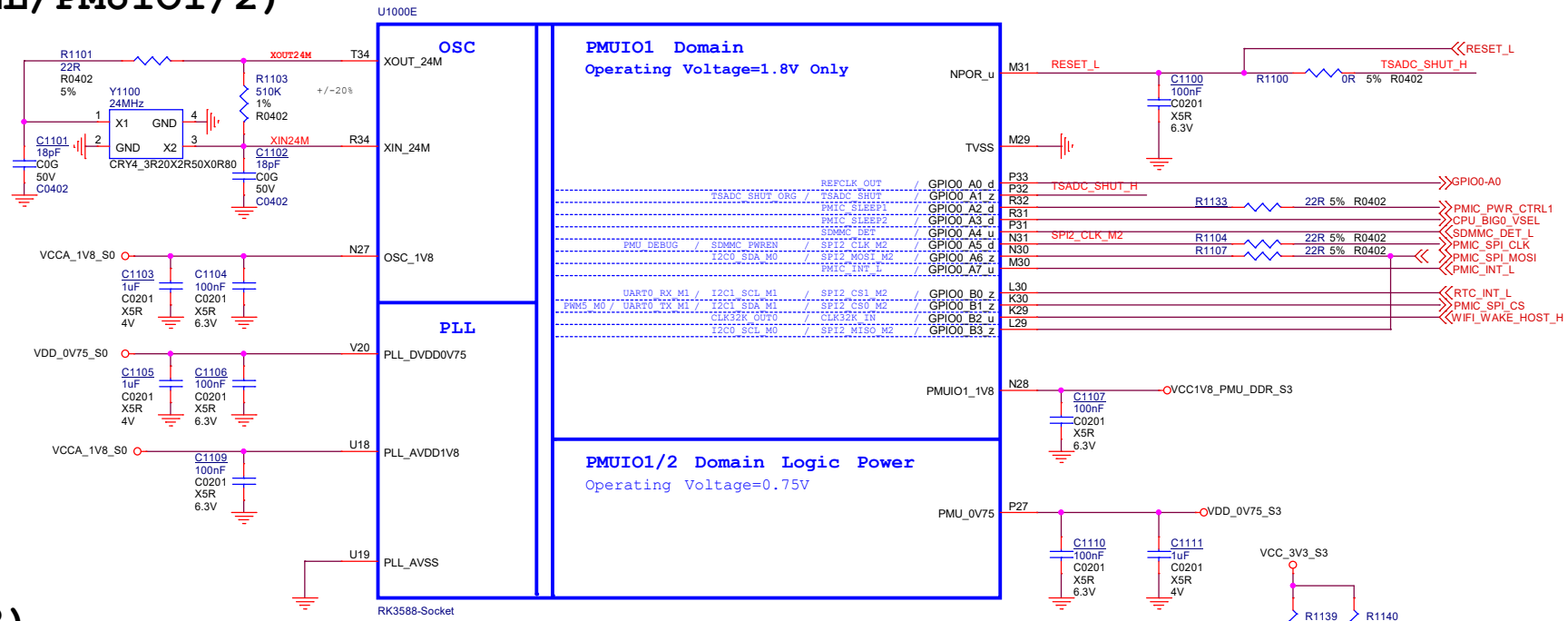


# RK3588_F(PMUIO2)

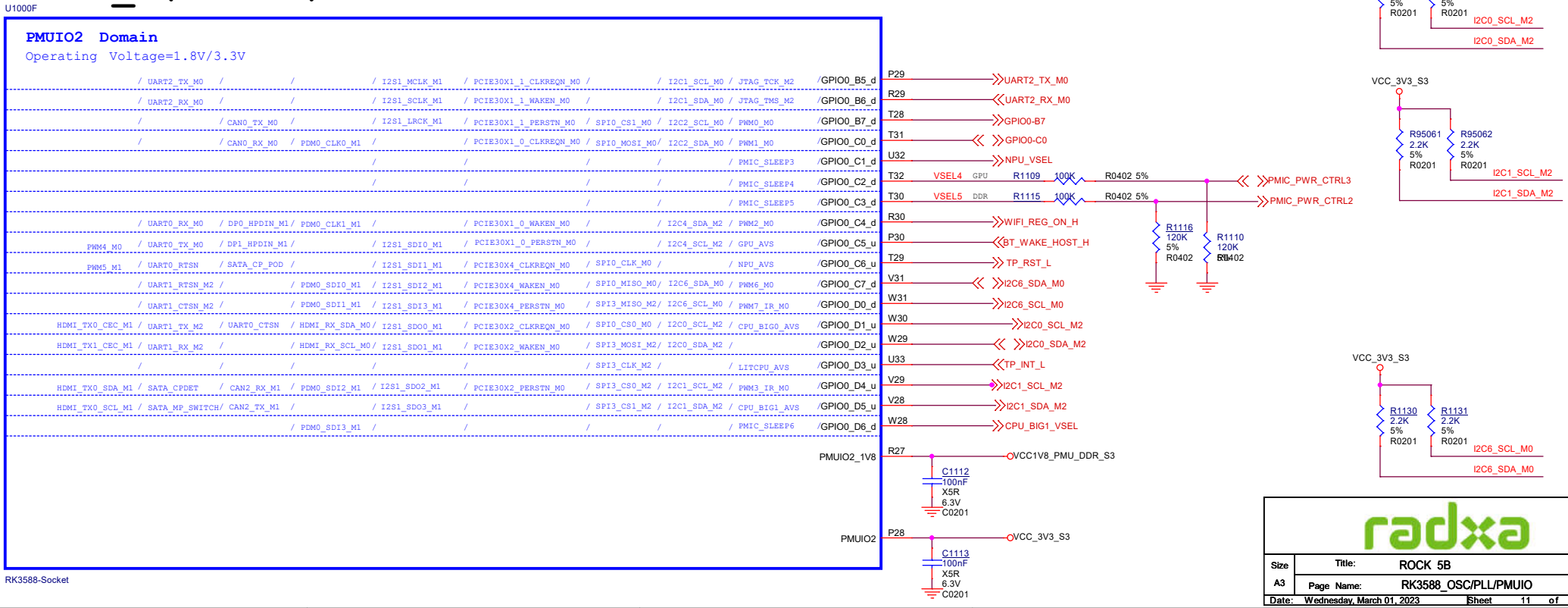


| Size | Title: | REV |
|---|---|---|
| A3 | Page Name: RK3588_OSC/PLL/PMUIO | 1.423 |
| Date: Wednesday, March 01, 2023 | Sheet 11 of 32 | |

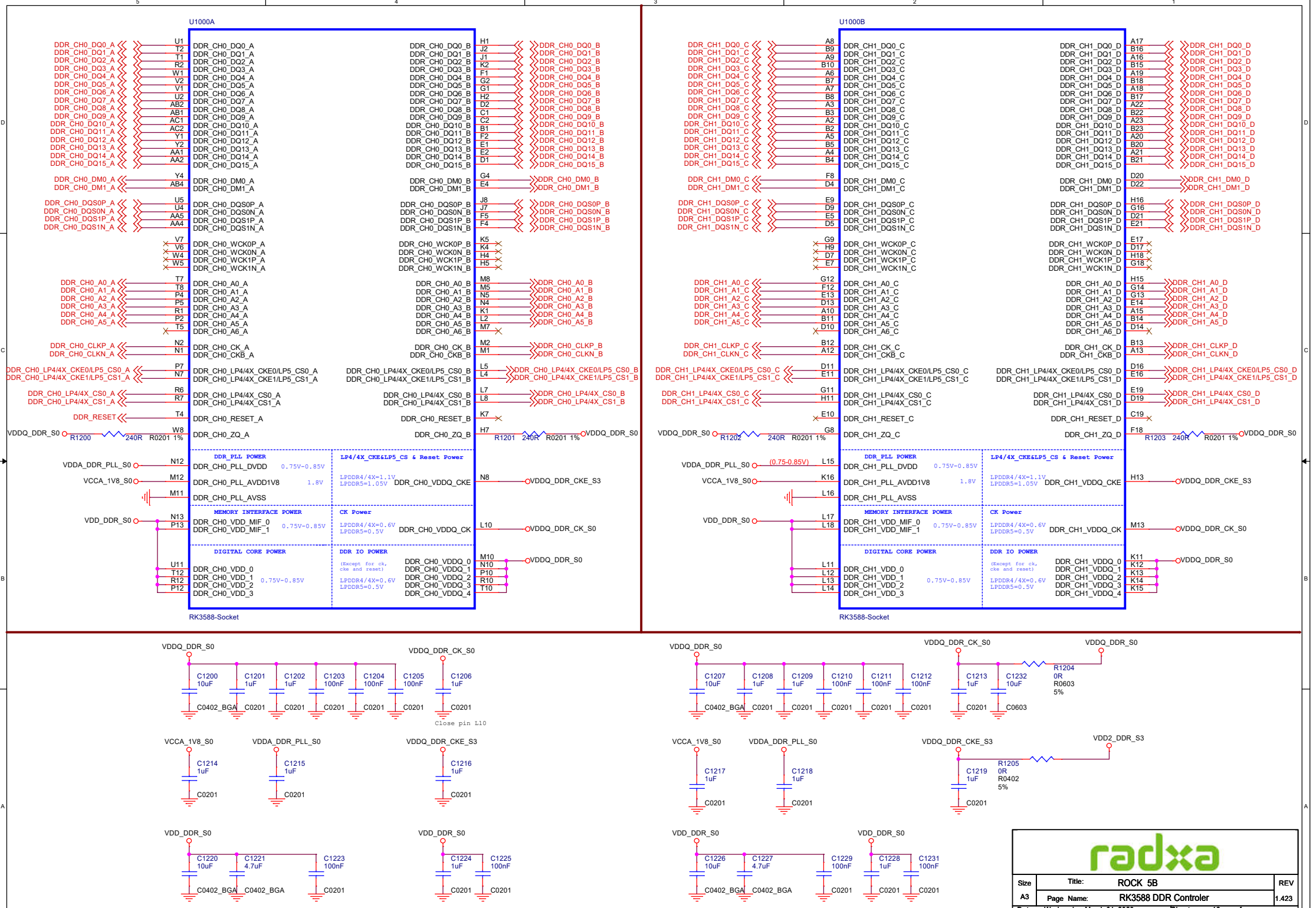
U1000A
U1000B
RK3588-Socket
DDR_PLL POWER
LP4/4X_CKE&LP5_CS & Reset Power
MEMORY INTERFACE POWER
CK Power
DIGITAL CORE POWER
DDR IO POWER
VDDQ_DDR_S0
VDDQ_DDR_CK_S0
VDDQ_DDR_CKE_S3
VDDA_DDR_PLL_S0
VCCA_1V8_S0
VDD_DDR_S0
VDD2_DDR_S3
Close pin L10
radxa
Size
A3
Title:
ROCK 5B
Page Name:
RK3588 DDR Controler
REV
1.423
Date:
Wednesday, March 01, 2023
Sheet
12
of
32

# RK3588_C(EMMCIO Domain)

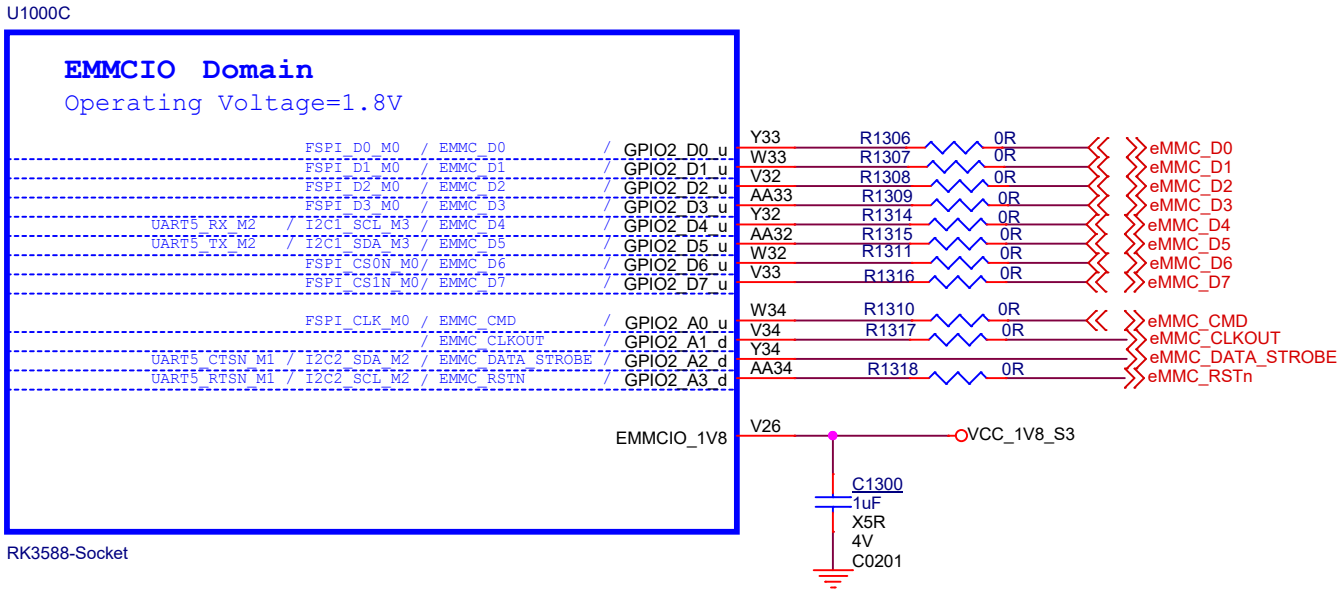


# RK3588_D(VCCIO2 Domain)

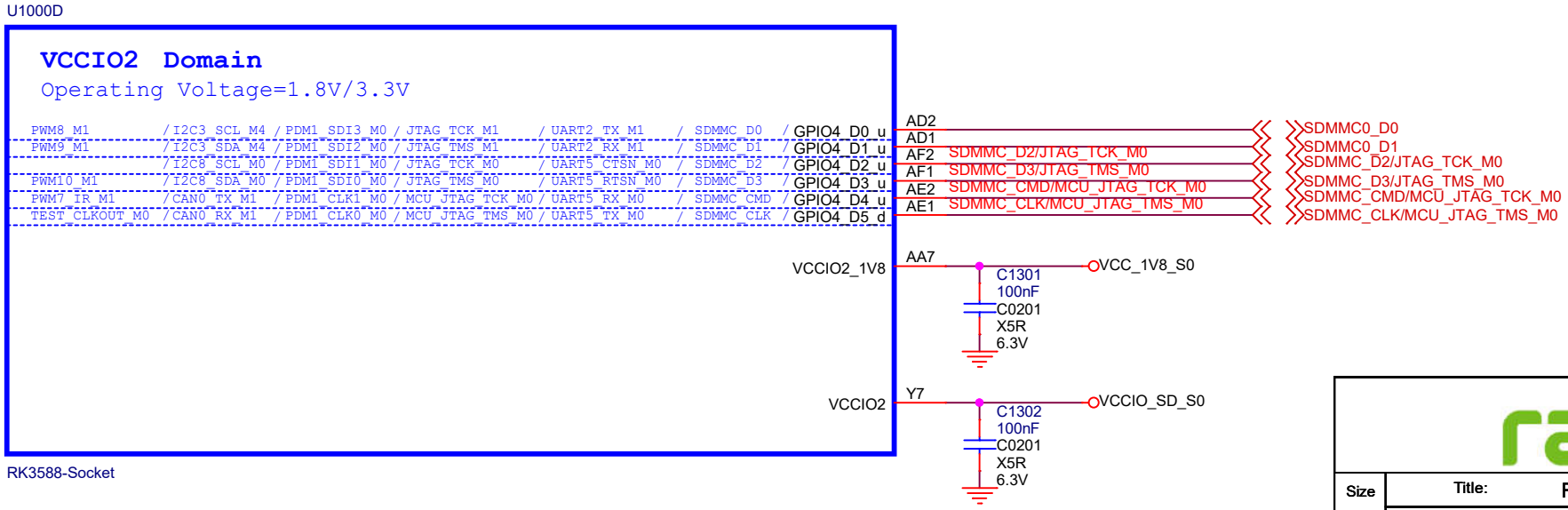


| Size | Title: | ROCK 5B | REV |
|---|---|---|---|
| A4 | Page Name: | RK3588_Flash/SD Controller | 1.423 |
| Date: Wednesday, March 01, 2023 | Sheet 13 of 32 | | |

# RK3588_M(TYPEC/DP)

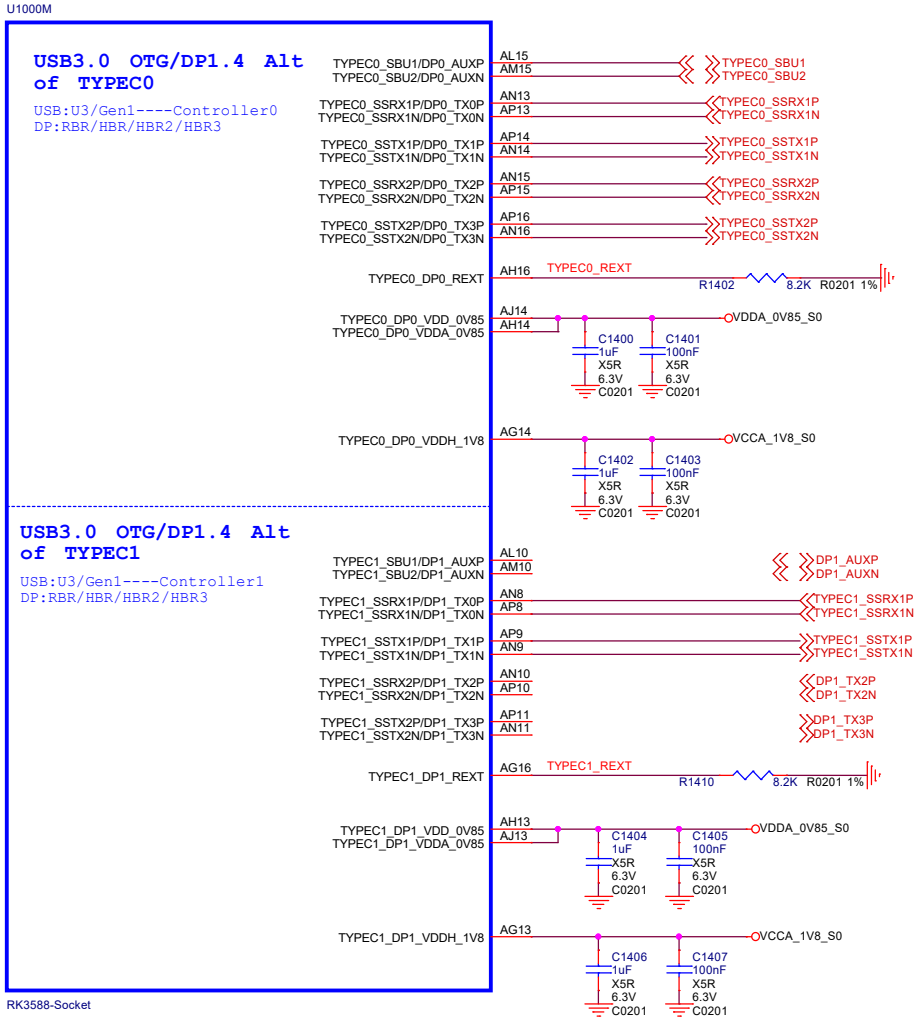


# RK3588_L(USB2.0 HOST/OTG)

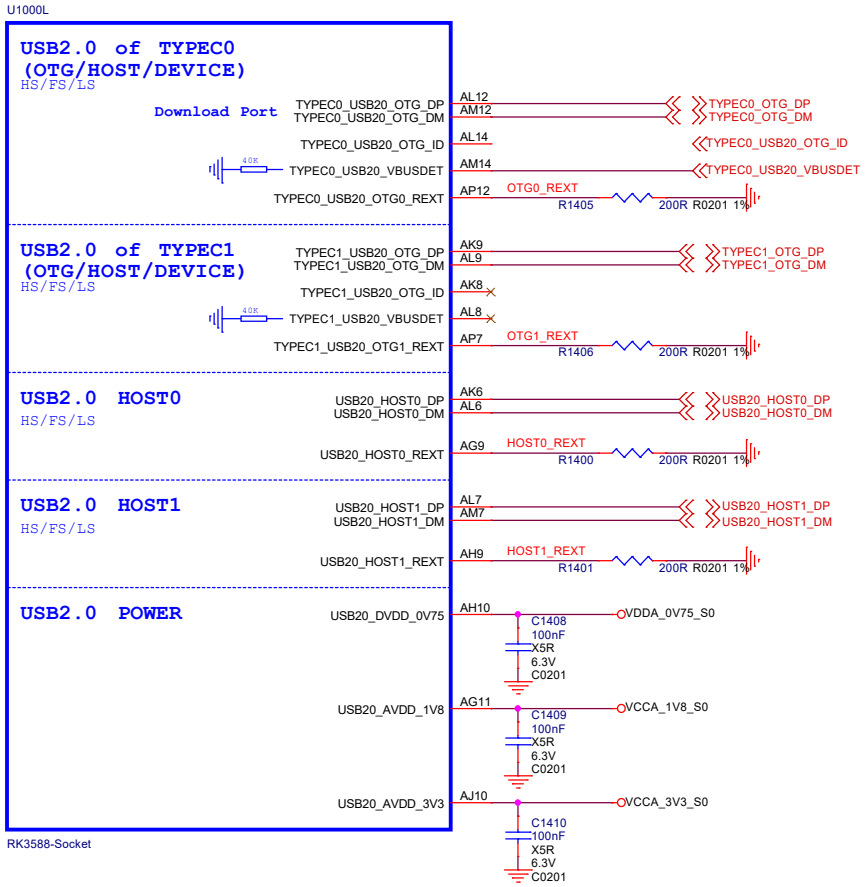


| Size | Title: ROCK 5B | REV |
|---|---|---|
| A3 | Page Name: RK3588_USB30/USB20_Ctrl | 1.423 |
| Date: Wednesday, March 01, 2023 | Sheet 14 of 32 | |

# RK3588_G(VCCIO1 Domain)

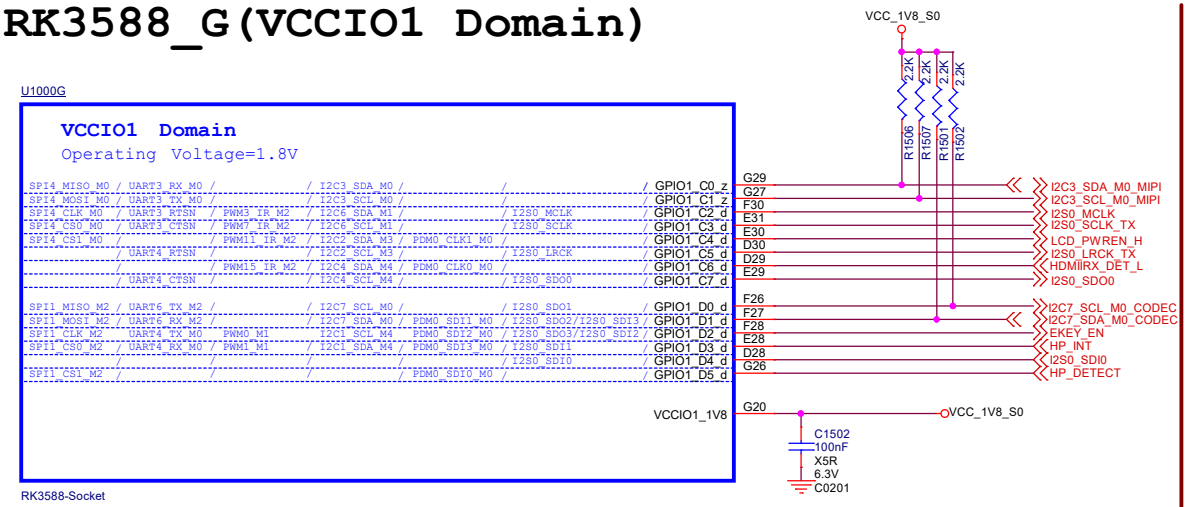


# RK3588_U(SARADC/OTP)

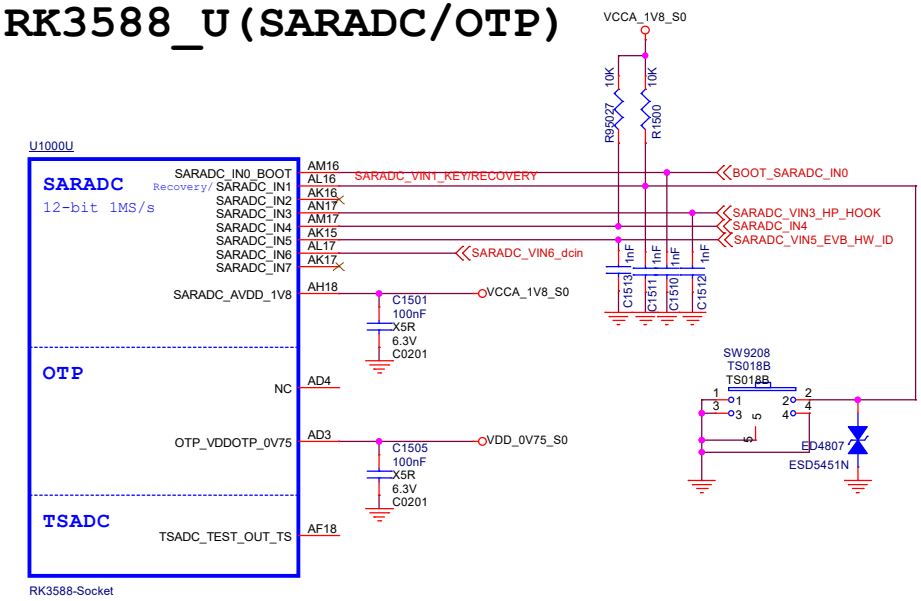


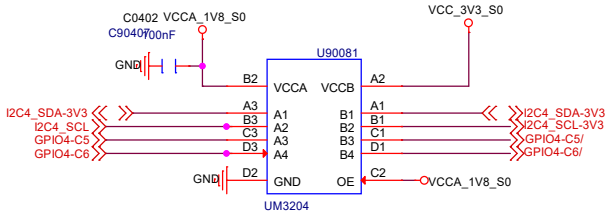


# RK3588_H(VCCIO3 Domain)

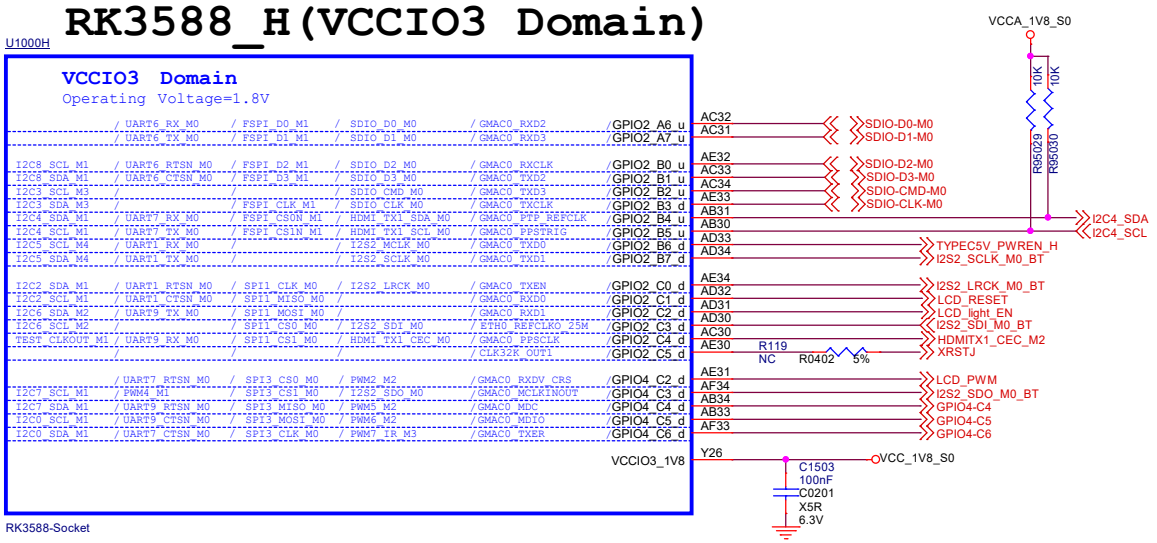


## BOOT MODE CONFIG

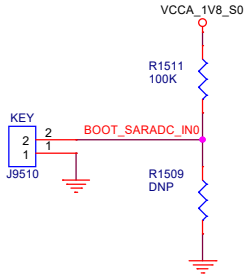


**TABLE 1**

| Item | Rup | Rdown | ADC | VOL | BOOT MODE |
|---|---|---|---|---|---|
| LEVEL1 | DNP | 100K | 0 | 0V | USB (Maskrom mode) |
| LEVEL2 | 100K | 20K | 682 | 0.3V | SD Card-USB |
| LEVEL3 | 100K | 51K | 1365 | 0.6V | EMMC-USB |
| LEVEL4 | 100K | 100K | 2047 | 0.9V | FSPI M0-USB |
| LEVEL5 | 100K | 200K | 2730 | 1.2V | FSPI M1-USB |
| LEVEL6 | 100K | 499K | 3412 | 1.5V | FSPI M2-USB |
| LEVEL7 | 100K | DNP | 4095 | 1.8V | FSPI_M2-FSPI_M1-FSPI_M0 -EMMC-SD Card-USB |

## BOARD ID CONFIG

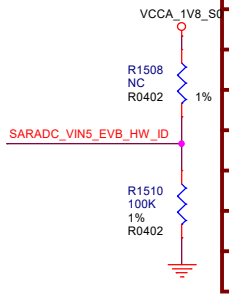


**TABLE 2**

| Item | Rup | Rdown | ADC | VOL | VERSION |
|---|---|---|---|---|---|
| LEVEL1 | DNP | 100K | 0 | 0V | A |
| LEVEL2 | 100K | 20K | 682 | 0.3V | B |
| LEVEL3 | 100K | 51K | 1365 | 0.6V | C |
| LEVEL4 | 100K | 100K | 2047 | 0.9V | D |
| LEVEL5 | 100K | 200K | 2730 | 1.2V | E |
| LEVEL6 | 100K | 499K | 3412 | 1.5V | F |
| LEVEL7 | 100K | DNP | 4095 | 1.8V | H |

radxa

| Size | Title: | REV |
|---|---|---|
| A3 | ROCK 5B | 1.423 |
| | Page Name: RK3588_SARADC/1.8V Only GPIO | |
| Date: Wednesday, March 01, 2023 | Sheet 15 of 32 | |

# RK3588_Q/R(MIPI_D/C_PHY0/1)

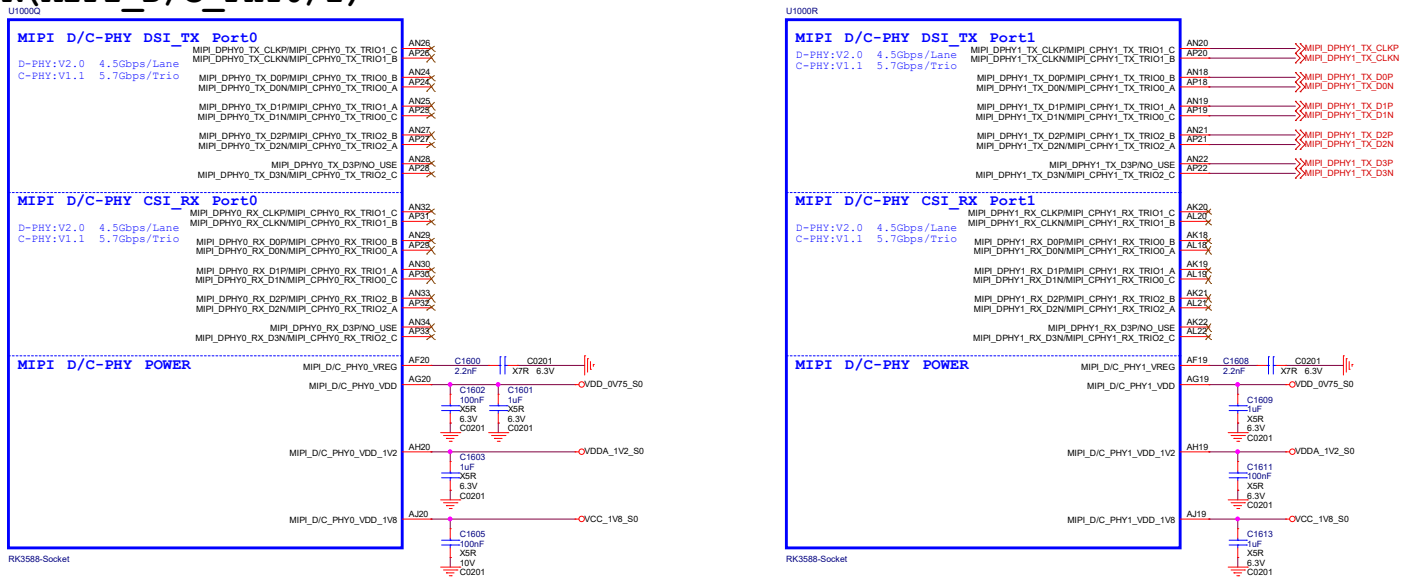





# RK3588_P(MIPI_CSI_RX_PHY)

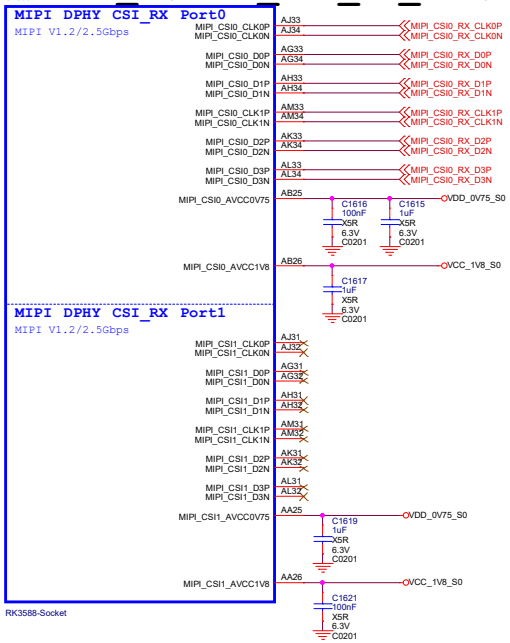


| | | | |
|---|---|---|---|
| Size A2 | Title: ROCK 5B | | REV 1.423 |
| | Page Name: RK3588_MIPI Interface | | |
| Date: Wednesday, March 01, 2023 | Sheet 16 of 32 | | |

# RK3588_S(HDMI2.1 TX)

U1000S

## HDMI TX/eDP MUX Port0

HDMI:V2.1 12Gbps
eDP: V1.3 5.4Gbps

| Pin | Signal | Net |
|---|---|---|
| AG2 | HDMI_TX0_SBDP/EDP_TX0_AUXP | HDMI0_TX_SBDP/eDP0_TX_AUXP |
| AG1 | HDMI_TX0_SBDN/EDP_TX0_AUXN | HDMI0_TX_SBDN/eDP0_TX_AUXN |
| AJ2 | HDMI_TX0_D0P/EDP_TX0_D0P | HDMI0_TX0P_PORT/eDP0_TX_D0P |
| AJ1 | HDMI_TX0_D0N/EDP_TX0_D0N | HDMI0_TX0N_PORT/eDP0_TX_D0N |
| AK3 | HDMI_TX0_D1P/EDP_TX0_D1P | HDMI0_TX1P_PORT/eDP0_TX_D1P |
| AK2 | HDMI_TX0_D1N/EDP_TX0_D1N | HDMI0_TX1N_PORT/eDP0_TX_D1N |
| AL2 | HDMI_TX0_D2P/EDP_TX0_D2P | HDMI0_TX2P_PORT/eDP0_TX_D2P |
| AL1 | HDMI_TX0_D2N/EDP_TX0_D2N | HDMI0_TX2N_PORT/eDP0_TX_D2N |
| AH3 | HDMI_TX0_D3P/EDP_TX0_D3P | HDMI0_TX3P_PORT/eDP0_TX_D3P |
| AH2 | HDMI_TX0_D3N/EDP_TX0_D3N | HDMI0_TX3N_PORT/eDP0_TX_D3N |
| AM2 | HDMI/EDP_TX0_REXT | HDMI_TX0_REXT — R1708 8.2K R0201 1% |
| AA9 | HDMI/EDP_TX0_VDD_0V75 | VDDA_0V75_S0 (<260mA) |
| AB9 | HDMI/EDP_TX0_AVDD_0V75 | (<1mA) |
| AC7 | HDMI/EDP_TX0_VDD_IO_1V8 | VCC_1V8_S0 |
| AC6 | HDMI/EDP_TX0_VDD_CMN_1V8 | VCC_1V8_S0 |

C1715 4.7uF X5R 10V C0402_BGA; C1751 4.7uF X5R 10V C0402 (VDD_IO<77mA, VDD_CMN<71mA); C1714 1uF X5R 6.3V C0201; C1716 1uF X5R 6.3V C0201; C1717 100nF X5R 6.3V C0201; C1742 4.7uF X5R 10V C0402

## HDMI TX/eDP MUX Port1

HDMI:V2.1 12Gbps
eDP: V1.3 5.4Gbps

| Pin | Signal | Net |
|---|---|---|
| AN2 | HDMI_TX1_SBDP/EDP_TX1_AUXP | HDMI1_TX_SBDP/eDP1_TX_AUXP |
| AP2 | HDMI_TX1_SBDN/EDP_TX1_AUXN | HDMI1_TX_SBDN/eDP1_TX_AUXN |
| AN4 | HDMI_TX1_D0P/EDP_TX1_D0P | HDMI1_TX0P_PORT/eDP1_TX_D0P |
| AP4 | HDMI_TX1_D0N/EDP_TX1_D0N | HDMI1_TX0N_PORT/eDP1_TX_D0N |
| AM5 | HDMI_TX1_D1P/EDP_TX1_D1P | HDMI1_TX1P_PORT/eDP1_TX_D1P |
| AN5 | HDMI_TX1_D1N/EDP_TX1_D1N | HDMI1_TX1N_PORT/eDP1_TX_D1N |
| AN6 | HDMI_TX1_D2P/EDP_TX1_D2P | HDMI1_TX2P_PORT/eDP1_TX_D2P |
| AP6 | HDMI_TX1_D2N/EDP_TX1_D2N | HDMI1_TX2N_PORT/eDP1_TX_D2N |
| AM3 | HDMI_TX1_D3P/EDP_TX1_D3P | HDMI1_TX3P_PORT/eDP1_TX_D3P |
| AN3 | HDMI_TX1_D3N/EDP_TX1_D3N | HDMI1_TX3N_PORT/eDP1_TX_D3N |
| AN1 | HDMI/EDP_TX1_REXT | HDMI_TX1_REXT — R1719 8.2K 1% R0201 |
| AD9 | HDMI/EDP_TX1_VDD_0V75 | VDDA_0V75_S0 (<260mA) |
| AC9 | HDMI/EDP_TX1_AVDD_0V75 | (<1mA) |
| AD7 | HDMI/EDP_TX1_VDD_IO_1V8 | VCC_1V8_S0 |
| AD6 | HDMI/EDP_TX1_VDD_CMN_1V8 | VCC_1V8_S0 |

C1735 1uF X5R 6.3V C0201; C1752 100nF X5R 10V C0201; C1730 4.7uF X5R 10V C0402; C1729 1uF X5R 6.3V C0201; C1731 1uF X5R 6.3V C0201; C1732 100nF X5R 6.3V C0201; C1733 4.7uF X5R 10V C0402

RK3588-Socket

# RK3588_T(HDMI20 RX)

U1000T

## HDMI RX

HDMI:V2.0

| Pin | Signal | Net |
|---|---|---|
| AG5 | HDMI_RX_D0P | HDMI_RX_D0P_PORT |
| AG4 | HDMI_RX_D0N | HDMI_RX_D0N_PORT |
| AH6 | HDMI_RX_D1P | HDMI_RX_D1P_PORT |
| AH5 | HDMI_RX_D1N | HDMI_RX_D1N_PORT |
| AJ5 | HDMI_RX_D2P | HDMI_RX_D2P_PORT |
| AJ4 | HDMI_RX_D2N | HDMI_RX_D2N_PORT |
| AF6 | HDMI_RX_CLKP | HDMI_RX_CLKP_PORT |
| AF5 | HDMI_RX_CLKN | HDMI_RX_CLKN_PORT |
| AF3 | HDMI_RX_REXT | R1730 200R R0201 1% |
| AE8 | HDMI_RX_AVDD0V75 | VDDA_0V75_S0 (<40mA) |
| AE4 | HDMI_RX_VPH3V3 | VCCA_3V3_S0 (<80mA) |
| AE5 | HDMI_RX_DVDD3V3 | VCCA_3V3_S0 |

C1738 1uF X5R 6.3V C0201; C1740 100nF X5R 6.3V C0201; C1741 1uF X5R 6.3V C0201

RK3588-Socket

radxa

| Size | Title: | REV |
|---|---|---|
| A3 | ROCK 5B | 1.423 |
| | Page Name: RK3588_HDMI/eDP Interface | |
| Date: Wednesday, March 01, 2023 | Sheet 17 of 32 | |

# RK3588_N(PCIE20)

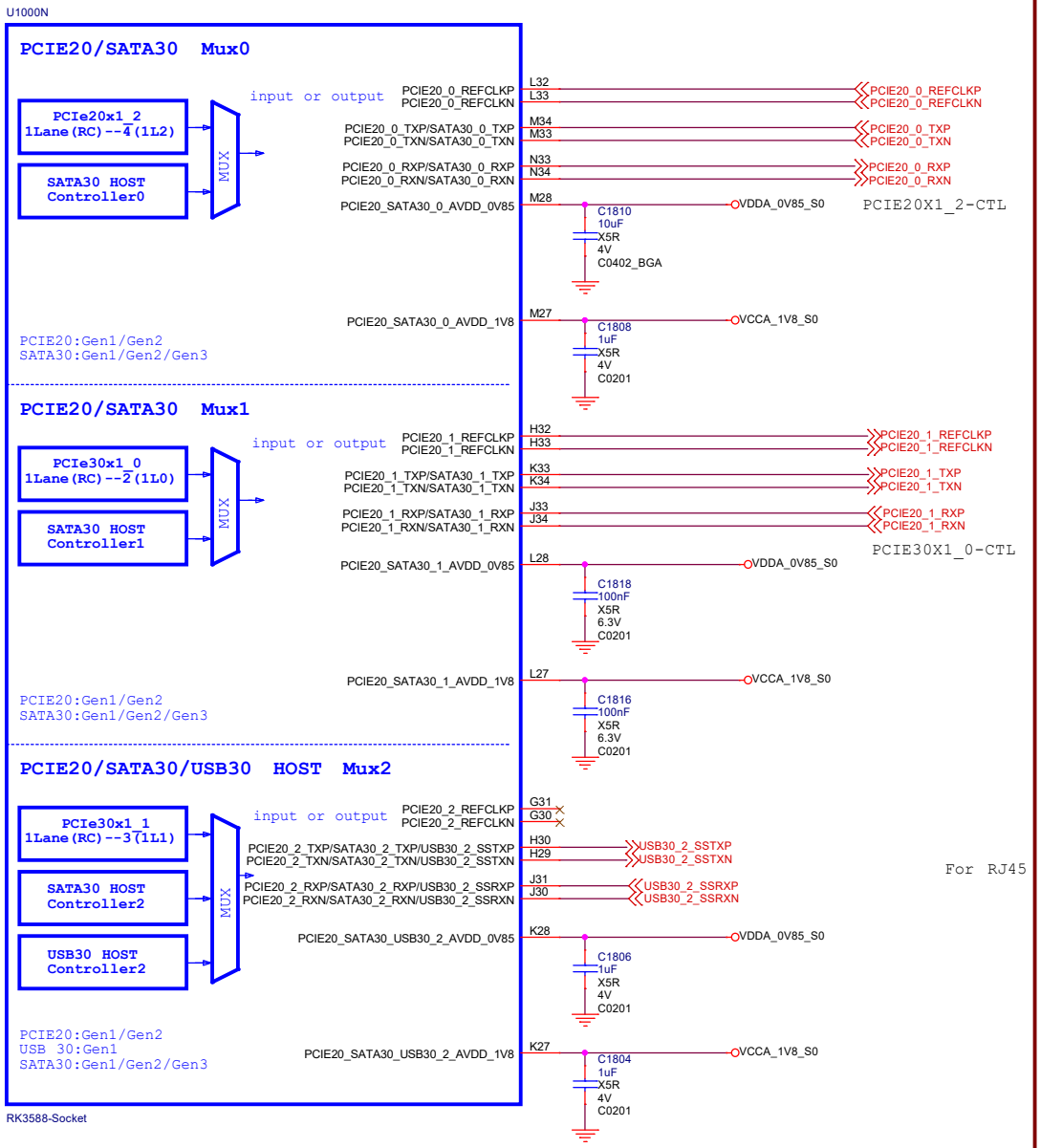


# RK3588_O(PCIE30)

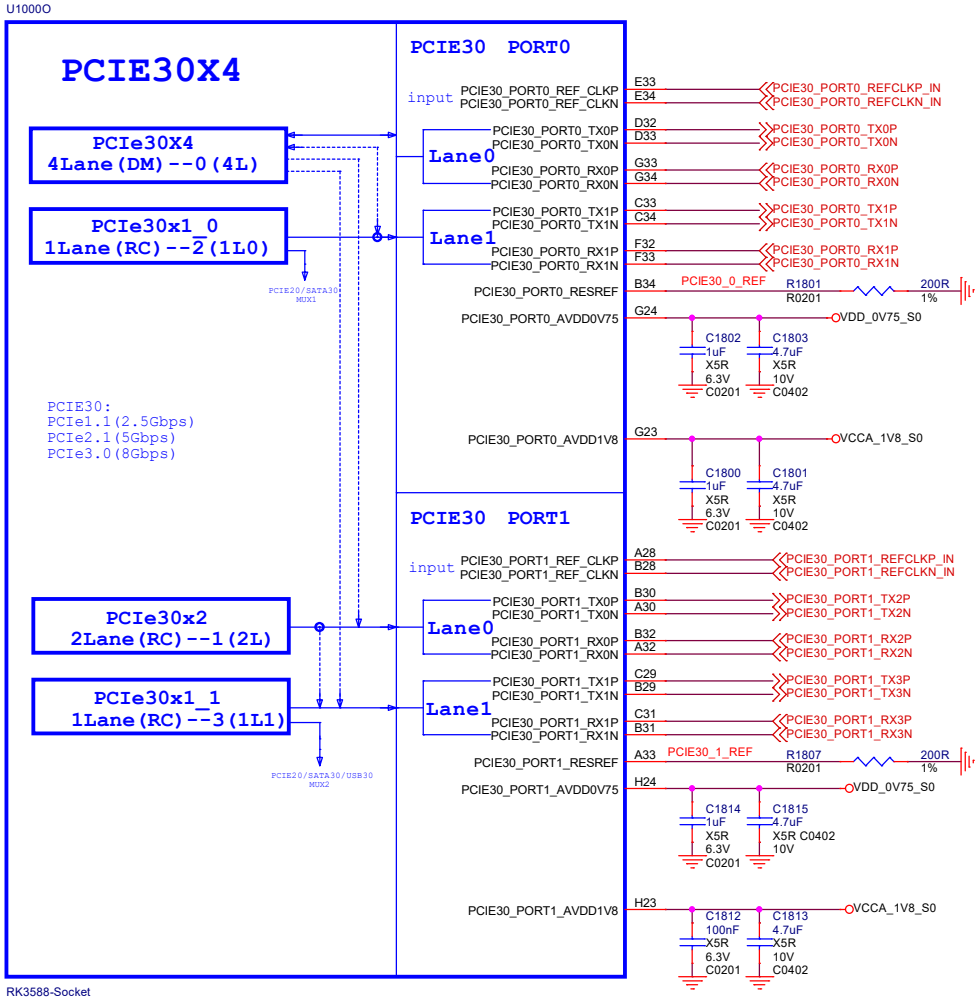


radxa

| Size | Title: | ROCK 5B | REV |
|---|---|---|---|
| A3 | Page Name: | RK3588_PCIE30/PCIE20/SATA30 | 1.423 |
| Date: Wednesday, March 01, 2023 | Sheet 18 of 32 | | |

# RK3588_J(VCCIO5 Domain)

U1000J

**VCCIO5 Domain**
Operating Voltage=1.8V/3.3V

| | | | | | | | | | |
|---|---|---|---|---|---|---|---|---|---|
| PWM10_M0 | SPI4_MISO_M1 | | I2C6_SDA_M4 | FSPI_D0_M2 | I2S3_MCLK | SDIO_D0_M1 | GMAC1_TXD2 | GPIO3_A0_u | AA29 |
| AUDDSM_LN | SPI4_MOSI_M1 | PWM11_IR_M0 | I2C6_SCL_M4 | FSPI_D1_M2 | I2S3_SCLK | SDIO_D1_M1 | GMAC1_TXD3 | GPIO3_A1_u | AA30 |
| AUDDSM_LP | SPI4_CLK_M1 | UART8_TX_M1 | | FSPI_D2_M2 | I2S3_LRCK | SDIO_D2_M1 | GMAC1_RXD2 | GPIO3_A2_u | AD27 |
| AUDDSM_RN | SPI4_CS0_M1 | UART8_RX_M1 | | FSPI_D3_M2 | I2S3_SDO | SDIO_D3_M1 | GMAC1_RXD3 | GPIO3_A3_u | AE27 |
| AUDDSM_RP | SPI4_CS1_M1 | UART8_RTSN_M1 | | | I2S3_SDI | SDIO_CMD_M1 | GMAC1_TXCLK | GPIO3_A4_d | AD28 |
| | MIPI_CAMERA0_CLK_M1 | UART8_CTSN_M1 | I2C4_SDA_M0 | FSPI_CLK_M2 | | SDIO_CLK_M1 | GMAC1_RXCLK | GPIO3_A5_d | AH30 |
| | MIPI_CAMERA1_CLK_M1 | | I2C4_SCL_M0 | | | | ETH1_REFCLKO_25M | GPIO3_A6_d | AH27 |
| PWM8_M0 | MIPI_CAMERA2_CLK_M1 | | | | | | GMAC1_RXD0 | GPIO3_A7_u | AG29 |
| PWM9_M0 | MIPI_CAMERA3_CLK_M1 | | | | | | GMAC1_RXD1 | GPIO3_B0_u | AG28 |
| PWM2_M1 | MIPI_CAMERA4_CLK_M1 | UART2_TX_M2 | | | | | GMAC1_RXDV_CRS | GPIO3_B1_d | AH29 |
| PWM3_IR_M1 | | UART2_RX_M2 | | | I2S2_SDI_M1 | | GMAC1_TXER | GPIO3_B2_d | AE28 |
| | | UART2_RTSN | | | I2S2_SDO_M1 | | GMAC1_TXD0 | GPIO3_B3_u | AC28 |
| | | UART2_CTSN | | | I2S2_MCLK_M1 | | GMAC1_TXD1 | GPIO3_B4_u | AC29 |
| PWM12_M0 | CAN1_RX_M0 | UART3_TX_M1 | | | I2S2_SCLK_M1 | | GMAC1_TXEN | GPIO3_B5_u | AD29 |
| PWM13_M0 | CAN1_TX_M0 | UART3_RX_M1 | | | I2S2_LRCK_M1 | | GMAC1_MCLKINOUT | GPIO3_B6_d | AE29 |
| | | | I2C3_SCL_M1 | SPI1_MOSI_M1 | HDMI_TX1_HPD_M1 | | GMAC1_PTP_REF_CLK | GPIO3_B7_d | AA28 |
| | | UART7_TX_M1 | I2C3_SDA_M1 | SPI1_MISO_M1 | | | GMAC1_PPSTRIG | GPIO3_C0_d | Y29 |
| | PCIE30X2_BUTTON_RSTN | UART7_RX_M1 | | SPI1_CLK_M1 | | | GMAC1_PPSCLK | GPIO3_C1_d | Y27 |
| PWM14_M0 | | UART7_RTSN_M1 | I2C8_SCL_M4 | SPI1_CS0_M1 | | MIPI_TE0 | GMAC1_MDC | GPIO3_C2_d | Y31 |
| PWM15_IR_M0 | | UART7_CTSN_M1 | I2C8_SDA_M4 | SPI1_CS1_M1 | | MIPI_TE1 | GMAC1_MDIO | GPIO3_C3_d | Y30 |
| CAN2_RX_M0 | PCIE30X4_CLKREQN_M2 | UART5_TX_M1 | FSPI_CS0N_M2 | SPI3_CS0_M3 | HDMI_TX1_CEC_M2 | | CIF_D8 | GPIO3_C4_u | AH26 |
| CAN2_TX_M0 | PCIE30X4_WAKEN_M2 | UART5_RX_M1 | FSPI_CS1N_M2 | SPI3_CS1_M3 | HDMI_TX1_SDA_M1 | | CIF_D9 | GPIO3_C5_u | AH25 |
| | PCIE30X4_PERSTN_M2 | | | SPI3_MISO_M3 | HDMI_TX1_SCL_M1 | | CIF_D10 | GPIO3_C6_u | AG26 |
| | PCIE20X1_2_CLKREQN_M0 | | I2C5_SCL_M0 | SPI3_MOSI_M3 | HDMI_TX0_SCL_M2 | | CIF_D11 | GPIO3_C7_u | AJ24 |
| PWM8_M2 | PCIE20X1_2_WAKEN_M0 | UART4_RX_M1 | I2C5_SDA_M0 | SPI3_CLK_M3 | HDMI_TX0_SDA_M2 | | CIF_D12 | GPIO3_D0_u | AH24 |
| PWM9_M2 | PCIE20X1_2_PERSTN_M0 | UART4_TX_M1 | | SPI0_MISO_M3 | HDMI_RX_CEC_M1 | | CIF_D13 | GPIO3_D1_d | AG23 |
| | PCIE30X2_CLKREQN_M2 | UART9_RTSN_M2 | I2C7_SCL_M2 | SPI0_MOSI_M3 | HDMI_RX_SCL_M1 | | CIF_D14 | GPIO3_D2_d | AG25 |
| PWM10_M2 | PCIE30X2_WAKEN_M2 | UART9_CTSN_M2 | I2C7_SDA_M2 | SPI0_CLK_M3 | HDMI_RX_SDA_M1 | | CIF_D15 | GPIO3_D3_d | AG24 |
| | PCIE30X2_PERSTN_M2 | UART9_RX_M2 | | SPI0_CS0_M3 | HDMI_RX_HPDOUT_M1/ | HDMI_TX0_HPD_M1/ | MCU_JTAG_TCK_M1 | GPIO3_D4_d | AA27 |
| PWM11_IR_M3 | PCIE30X4_BUTTON_RSTN | UART9_TX_M2 | | SPI0_CS1_M3 | DP1_HPDIN_M0 | | MCU_JTAG_TMS_M1 | GPIO3_D5_d | AB28 |

VCCIO5_1V8 — W25 — C1903 100nF X5R 6.3V C0201 — VCC_1V8_S0

VCCIO5 — W26 — C1902 100nF X5R 6.3V C0201 — VCC_3V3_S0

AG29 — PWM8_M0 — TP6802 TP_2.0

RK3588-Socket

# RK3588_K(VCCIO6 Domain)

U1000K

**VCCIO6 Domain**
Operating Voltage=1.8V/3.3V

| | | | | | | | | | |
|---|---|---|---|---|---|---|---|---|---|
| | SPI0_MISO_M1 | UART9_RTSN_M1 | | | I2S1_MCLK_M0 | PCIE30X1_1_CLKREQN_M1 | BT1120_D0 | CIF_D0 | GPIO4_A0_d | AK30 |
| | SPI0_MOSI_M1 | UART9_CTSN_M1 | | | I2S1_SCLK_M0 | PCIE30X1_1_WAKEN_M1 | BT1120_D1 | CIF_D1 | GPIO4_A1_d | AL30 |
| | SPI0_CLK_M1 | | | | I2S1_LRCK_M0 | PCIE30X1_1_PERSTN_M1 | BT1120_D2 | CIF_D2 | GPIO4_A2_d | AM29 |
| | | UART0_TX_M2 | | | | PCIE30X1_0_CLKREQN_M1 | BT1120_D3 | CIF_D3 | GPIO4_A3_d | AL29 |
| | SPI2_MISO_M1 | UART0_RX_M2 | I2C3_SCL_M2 | | | PCIE30X1_0_WAKEN_M1 | BT1120_D4 | CIF_D4 | GPIO4_A4_d | AL28 |
| | SPI2_MOSI_M1 | UART3_TX_M2 | I2C3_SDA_M2 | | I2S1_SDI0_M0 | PCIE30X1_0_PERSTN_M1 | BT1120_D5 | CIF_D5 | GPIO4_A5_d | AK27 |
| | SPI2_CLK_M1 | UART3_RX_M2 | I2C5_SCL_M2 | | I2S1_SDI1_M0 | PCIE30X2_CLKREQN_M1 | BT1120_D6 | CIF_D6 | GPIO4_A6_d | AL27 |
| | SPI2_CS0_M1 | | I2C5_SDA_M2 | | I2S1_SDI2_M0 | PCIE30X2_WAKEN_M1 | BT1120_D7 | CIF_D7 | GPIO4_A7_d | AM27 |
| | SPI2_CS1_M1 | UART8_TX_M0 | I2C6_SDA_M3 | | I2S1_SDI3_M0 | PCIE30X2_PERSTN_M1 | BT1120_CLKOUT | CIF_CLKIN | GPIO4_B0_d | AK26 |
| SATA2_ACT_LED_M0 | SPDIF1_TX_M1 | SPI0_CS1_M1 | UART8_RX_M0 | I2C6_SCL_M3 | I2S1_SDO0_M0 | PCIE30X1_0_BUTTON_RSTN | | MIPI_CAMERA0_CLK_M0 | GPIO4_B1_u | AL24 |
| CAN1_RX_M1 | PWM14_M1 | SPI0_CS0_M1 | UART8_RTSN_M0 | I2C7_SCL_M3 | I2S1_SDO1_M0 | PCIE30X1_1_BUTTON_RSTN | BT1120_D8 | CIF_HREF | GPIO4_B2_u | AK25 |
| CAN1_TX_M1 | PWM15_IR_M1 | | UART8_CTSN_M0 | I2C7_SDA_M3 | I2S1_SDO2_M0 | PCIE20X1_2_BUTTON_RSTN | BT1120_D9 | CIF_VSYNC | GPIO4_B3_u | AM25 |
| SPDIF0_TX_M1 | PWM11_IR_M1 | DP0_HPDIN_M0 | UART9_TX_M1 | | I2S1_SDO3_M0 | PCIE30X4_CLKREQN_M1 | BT1120_D10 | CIF_CLKOUT | GPIO4_B4_u | AL26 |
| SATA1_ACT_LED_M0 | PWM12_M1 | SPI3_MISO_M1 | UART9_RX_M1 | | HDMI_RX_CEC_M0 | PCIE30X4_WAKEN_M1 | BT1120_D11 | | GPIO4_B5_d | AK26 |
| SATA0_ACT_LED_M0 | PWM13_M1 | SPI3_MOSI_M1 | | I2C5_SCL_M1 | HDMI_RX_HPDOUT_M0 / | PCIE30X4_PERSTN_M1 | BT1120_D12 | | GPIO4_B6_d | AJ27 |
| | | SPI3_CLK_M1 | | I2C5_SDA_M1 | HDMI_TX0_SCL_M0 / | PCIE20X1_2_CLKREQN_M1 | BT1120_D13 | | GPIO4_B7_u | AJ28 |
| | | SPI3_CS0_M1 | | I2C8_SCL_M3 | HDMI_TX0_SDA_M0 | PCIE20X1_2_WAKEN_M1 | BT1120_D14 | | GPIO4_C0_u | AJ25 |
| SPDIF1_TX_M2 | PWM5_M1 | SPI3_CS1_M1 | | I2C8_SDA_M3 | HDMI_TX0_CEC_M0 | PCIE20X1_2_PERSTN_M1 | BT1120_D15 | | GPIO4_C1_d | AK24 |

VCC_3V3_S0

R95032 2.2K 5% R0201 — R95033 2.2K 5% R0201

AK30 — CM_RST_L
AL30 — HDMI1_TX_ON_H
AM29 — W-DISABLE
AL29 — PCIE30x1_0_CLKREQn_M1_L
AL28 — PCIE30x1_0_WAKEn_M1_L
AK27 — PCIE30x1_0_PERSTn_M1_L
AL27 — TYPEC0_SBU1_DC
AM27 — TYPEC0_SBU2_DC
AK26 — USB_HOST_PWREN_H
AL24 — HDMI0_TX_ON_H
AK25 — I2C7_SCL_M3
AM25 — I2C7_SDA_M3
AL26 — PCIE30X4_CLKREQn_M1_L
AJ26 — PCIE30X4_WAKEn_M1_L
AJ27 — PCIE30X4_PERSTn_M1_L
AJ28 — HDMITX0_SCL_M0
AJ25 — HDMITX0_SDA_M0
AK24 — HDMITX0_CEC_M0

VCCIO6_1V8 — AC25 — C1909 100nF X5R 6.3V C0201 — VCC_1V8_S0

VCCIO6 — AC26 — C1908 100nF X5R 6.3V C0201 — VCC_3V3_S0

RK3588-Socket

# RK3588_I(VCCIO4 Domain)

U1000I

**VCCIO4 Domain**
Operating Voltage=1.8V/3.3V

| | | | | | | | | | |
|---|---|---|---|---|---|---|---|---|---|
| | | | SPI4_MISO_M2 | PCIE30X1_1_CLKREQN_M2 | DP0_HPDIN_M2 | I2C2_SDA_M4 | UART6_RX_M1 | GPIO1_A0_d | A24 |
| SATA1_ACT_LED_M1 | | | SPI4_MOSI_M2 | PCIE30X1_1_WAKEN_M2 | DP1_HPDIN_M2 | I2C2_SCL_M4 | UART6_TX_M1 | GPIO1_A1_d | A25 |
| | | PWM0_M2 | SPI4_CLK_M2 | | VOP_POST_EMPTY | I2C4_SDA_M3 | UART6_RTSN_M1 | GPIO1_A2_d | A26 |
| | | PWM1_M2 | SPI4_CS0_M2 | | HDMI_TX1_SDA_M2 | I2C4_SCL_M3 | UART6_CTSN_M1 | GPIO1_A3_d | A27 |
| | | | SPI2_MISO_M0 | | HDMI_TX1_SCL_M2 | | | GPIO1_A4_d | B25 |
| | | | SPI2_MOSI_M0 | | HDMI_TX0_HPD_M0 | | | GPIO1_A5_d | B26 |
| | | | SPI2_CLK_M0 | | HDMI_TX1_HPD_M0 | | | GPIO1_A6_d | C24 |
| | | PWM3_IR_M3 | SPI2_CS0_M0 | PCIE30X1_1_PERSTN_M2 | | PDM1_SDI0_M1 | | GPIO1_A7_u | C25 |
| | | | SPI2_CS1_M0 | PCIE30X4_CLKREQN_M3 | | PDM1_SDI1_M1 | | GPIO1_B0_u | C27 |
| | | | SPI0_MISO_M2 | PCIE30X4_WAKEN_M3 | | PDM1_SDI2_M1 | | GPIO1_B1_d | D25 |
| | | | SPI0_MOSI_M2 | PCIE30X4_PERSTN_M3 | | PDM1_SDI3_M1 | UART4_RX_M2 | GPIO1_B2_d | D26 |
| SATA0_ACT_LED_M1 | | | SPI0_CLK_M2 | PCIE30X1_0_WAKEN_M2 | | PDM1_CLK1_M1 | UART4_TX_M2 | GPIO1_B3_d | D27 |
| | | | SPI0_CS0_M2 | PCIE30X1_0_PERSTN_M2 | | PDM1_CLK0_M1 | UART7_RX_M2 | GPIO1_B4_u | E24 |
| | | | SPI0_CS1_M2 | PCIE30X1_0_CLKREQN_M2/ | | | UART7_TX_M2 | GPIO1_B5_u | E25 |
| | HDMI_RX_HPDOUT_M2/ | | SPDIF0_TX_M0 | PCIE30X2_WAKEN_M3 | MIPI_CAMERA1_CLK_M0 | I2C5_SCL_M3 | UART1_TX_M1 | GPIO1_B6_u | E26 |
| SATA2_ACT_LED_M1/ | HDMI_RX_CEC_M2 | PWM13_M2 | SPDIF1_TX_M0 | PCIE30X2_PERSTN_M3 | MIPI_CAMERA2_CLK_M0 | I2C5_SDA_M3 | UART1_RX_M1 | GPIO1_B7_u | E27 |
| | HDMI_RX_SCL_M2 | PWM14_M2 | | | MIPI_CAMERA3_CLK_M0 | I2C8_SCL_M2 | UART1_RTSN_M1 | GPIO1_D6_u | F24 |
| | HDMI_RX_SDA_M2 | PWM15_IR_M3 | | PCIE30X2_CLKREQN_M3 | MIPI_CAMERA4_CLK_M0 | I2C8_SDA_M2 | UART1_CTSN_M1 | GPIO1_D7_u | F25 |

VCCIO4_1V8 — H20 — C1907 100nF X5R 6.3V C0201 — VCC_1V8_S0

VCCIO4 — H21

RK3588-Socket

radxa

| Size | Title: | ROCK 5B | REV |
|---|---|---|---|
| A2 | Page Name: | RK3588_1.8V/ 3.3V GPIO | 1.423 |
| Date: Wednesday, March 01, 2023 | Sheet 19 of 32 | | |

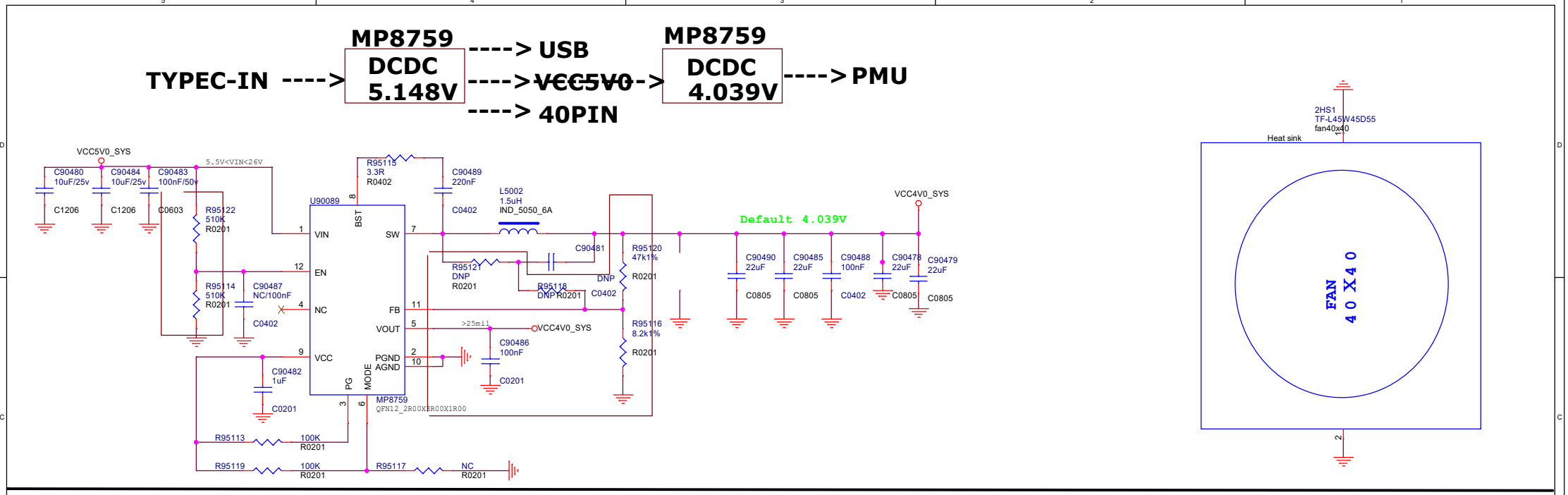


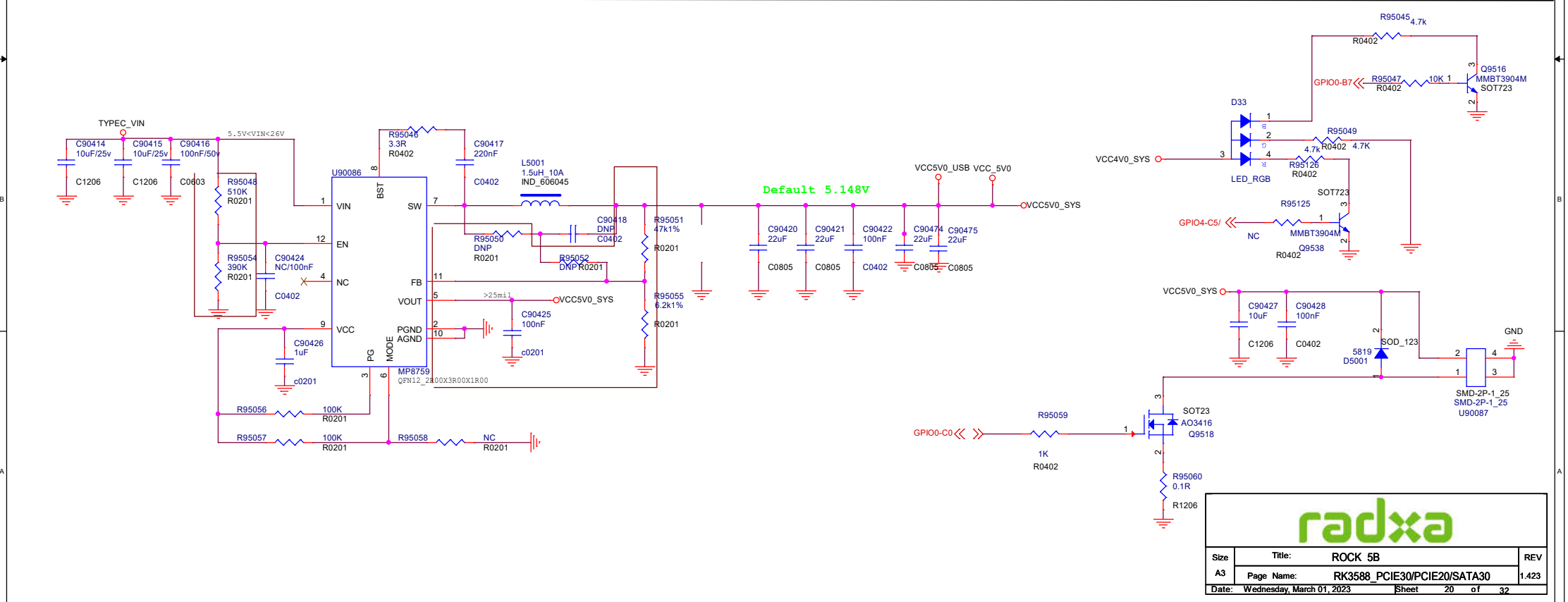


radxa

| Size | Title: | REV |
|---|---|---|
| A3 | ROCK 5B | 1.423 |
| | Page Name: RK3588_PCIE30/PCIE20/SATA30 | |
| Date: Wednesday, March 01, 2023 | Sheet 20 of 32 | |

# CODEC ES8316

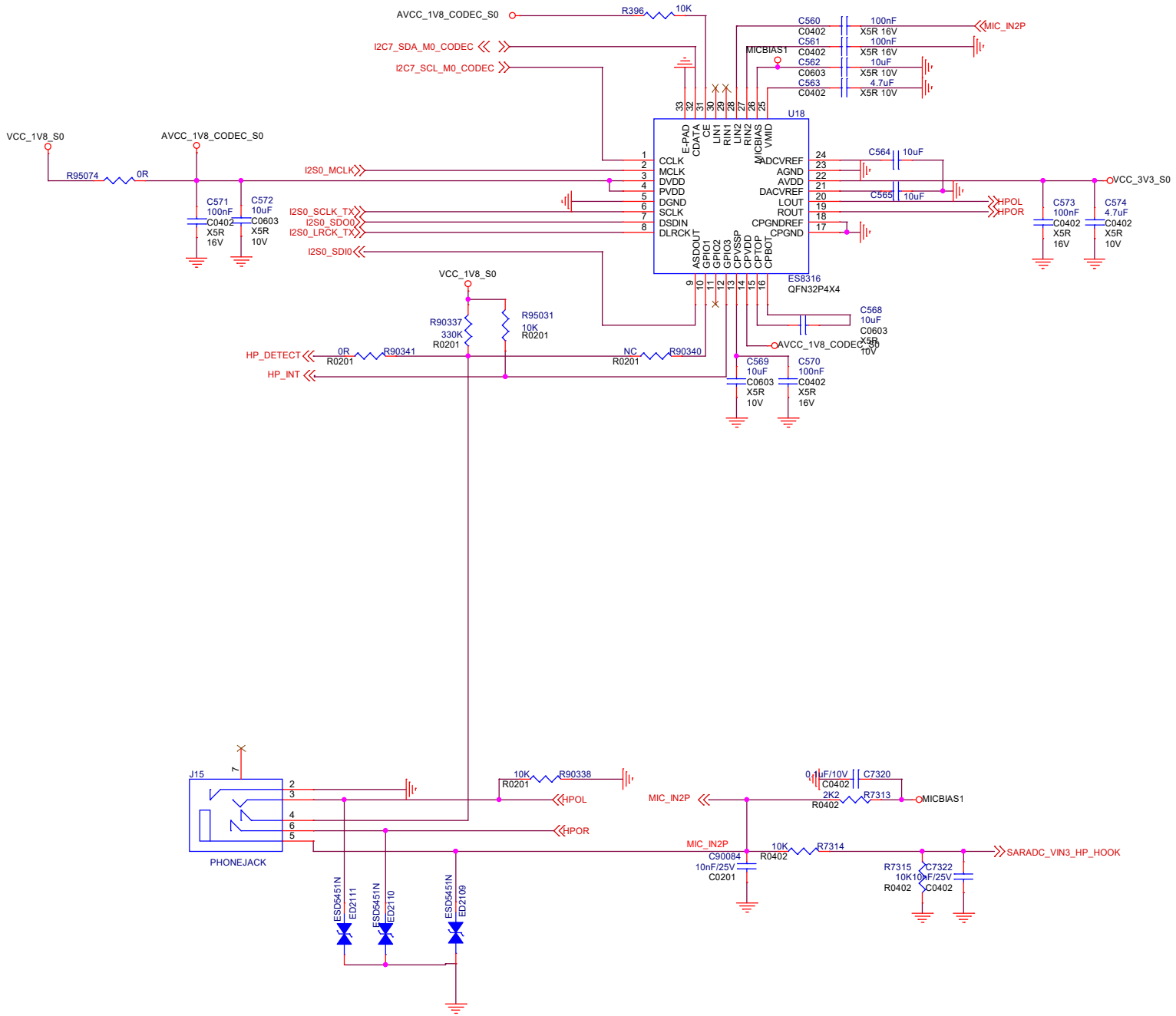


radxa

| Size | Title: | REV |
|---|---|---|
| A3 | ROCK 5B | 1.423 |
| | Page Name: CODEC ES8316 | |
| Date: Wednesday, March 01, 2023 | Sheet 21 of 32 | |

# PMIC RK806-1 BUCK

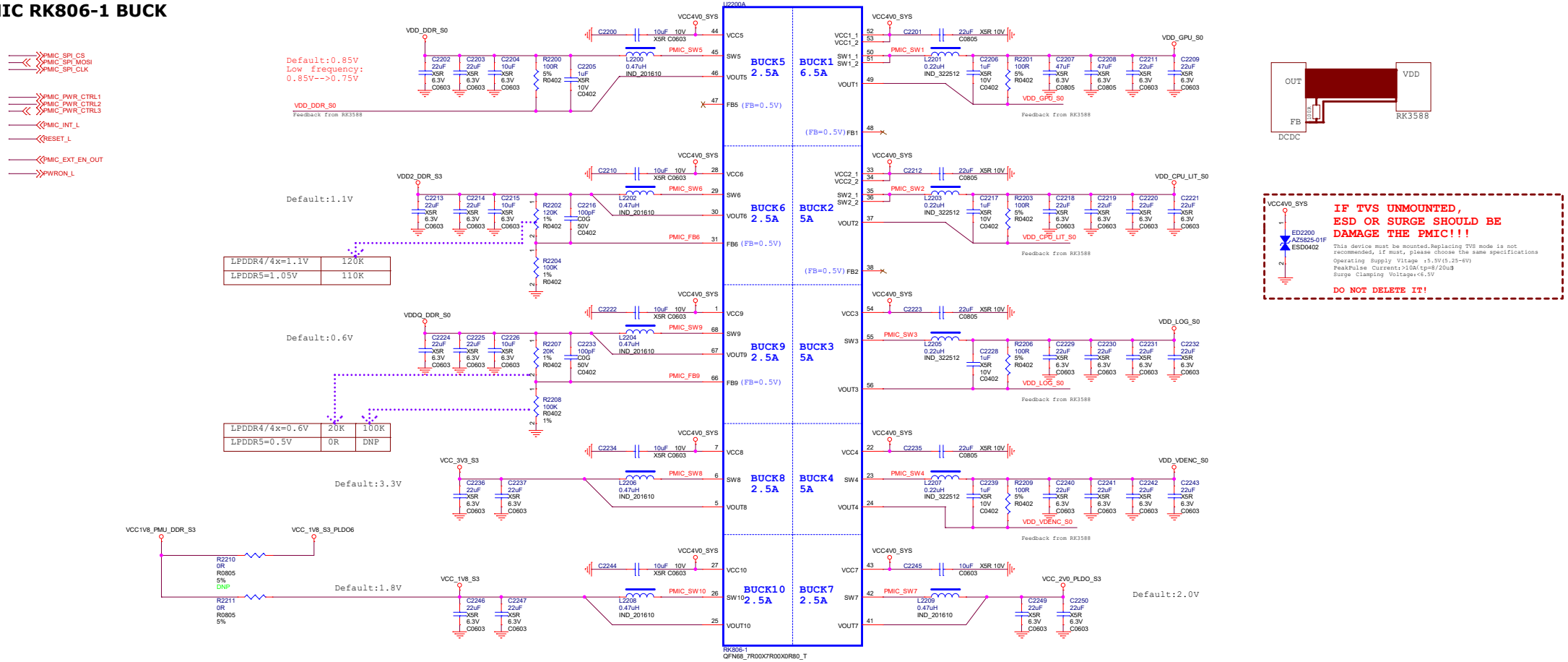


# PMIC RK806-1 Managerment

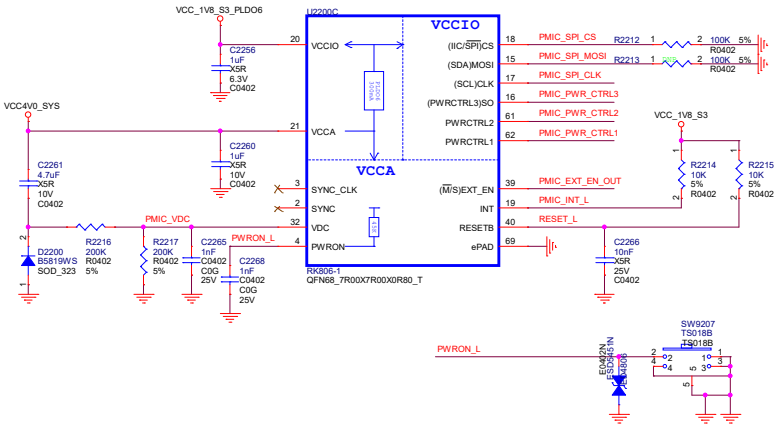


# PMIC RK806-1 LDO

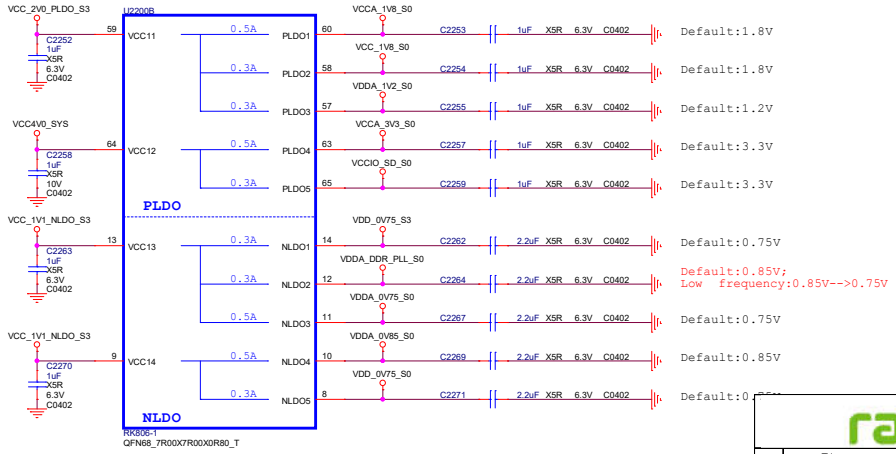


radxa

| Size | Title: | REV |
|---|---|---|
| A2 | ROCK 5B | |
| | Page Name: PMIC RK806-1 BUCK | 1.423 |
| Date: Wednesday, March 01, 2023 | Sheet 22 of 32 | |

# VDD_CPU_BIG0

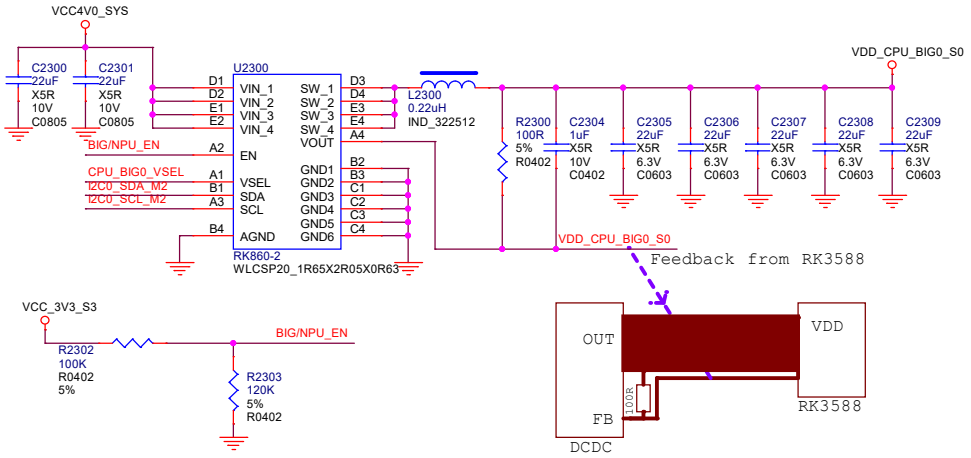


# VDD_CPU_BIG1

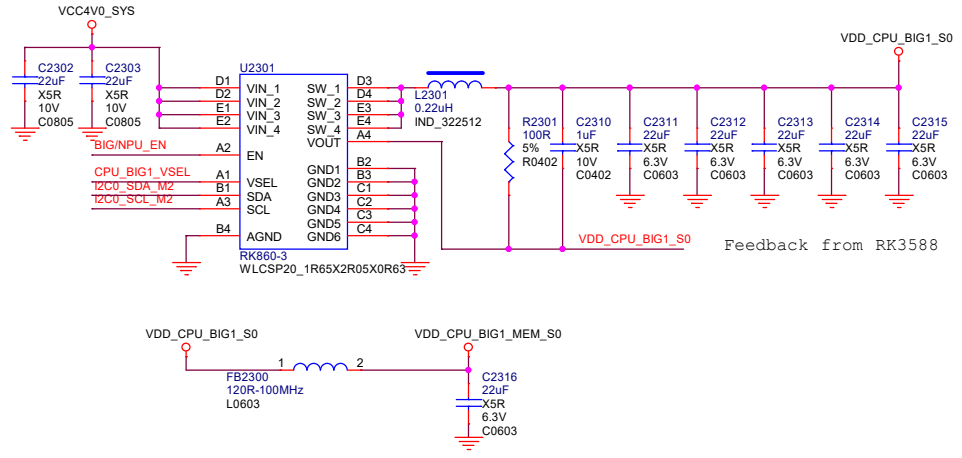


# VDD_NPU

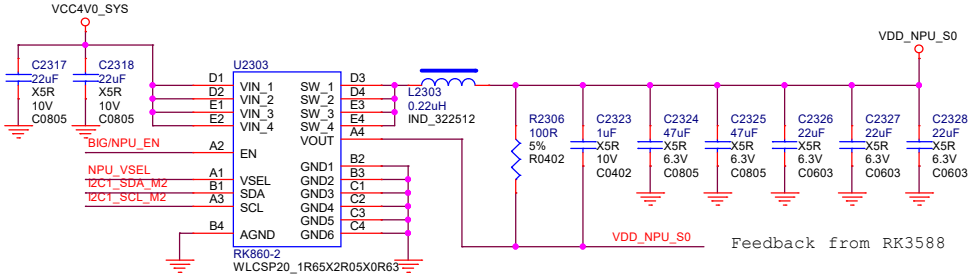


# VCC_1V1_NLDO_S3

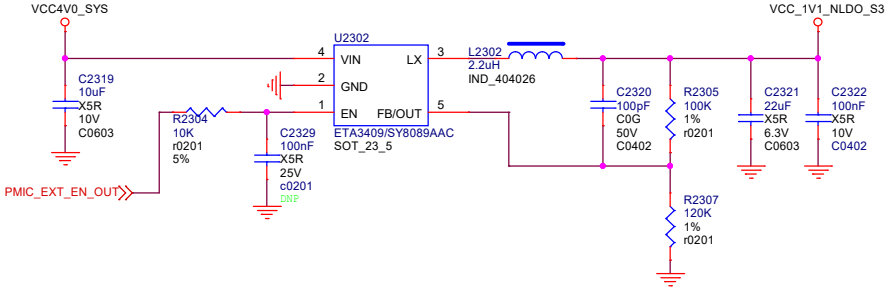


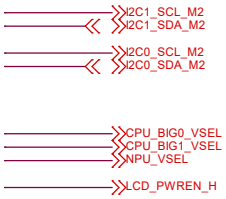


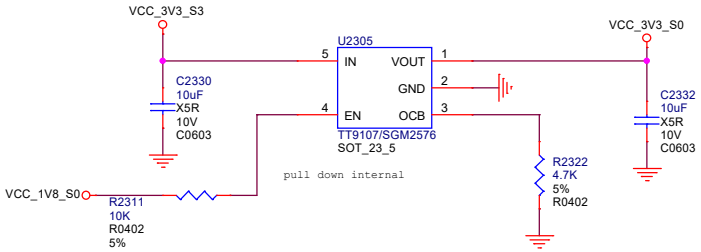


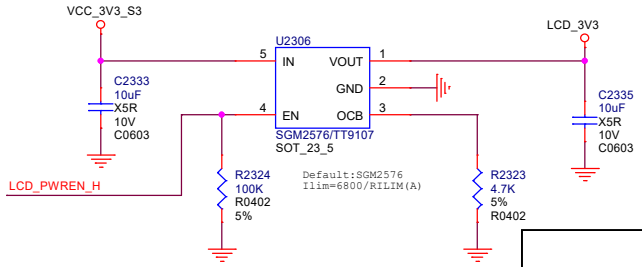


radxa

| Size | Title: | REV |
|---|---|---|
| A3 | ROCK 5B | |
| | Page Name: Power_Ext Discrete | 1.423 |
| Date: Wednesday, March 01, 2023 | Sheet 23 of 32 | |

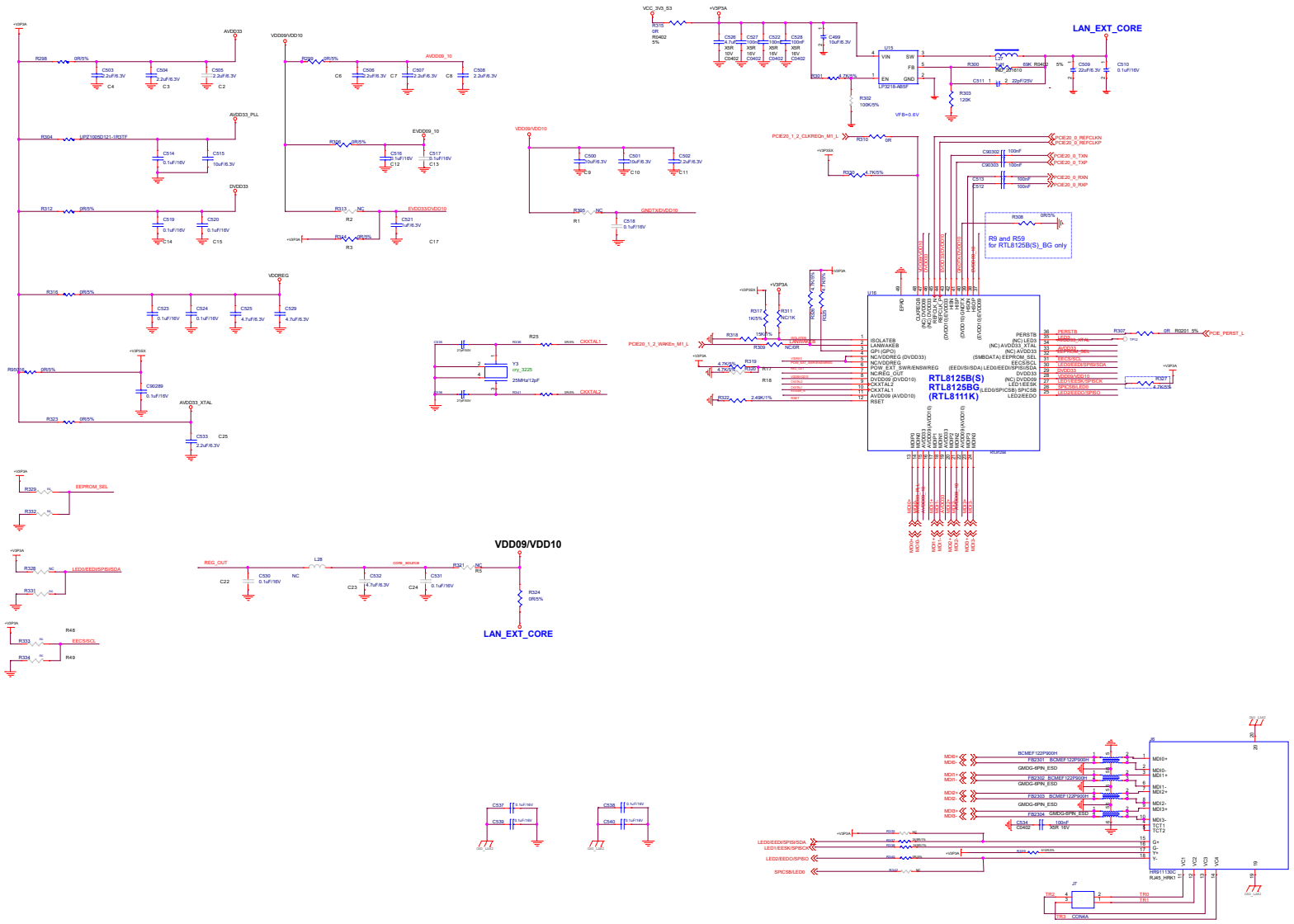


radxa

| Size | Title: | REV |
|---|---|---|
| A1 | ROCK 5B | |
| | Page Name: PCIE TO RJ45_RTL8125B | 1.423 |
| Date: Wednesday, March 01, 2023 | Sheet 24 of 30 | |

# eMMC FLASH

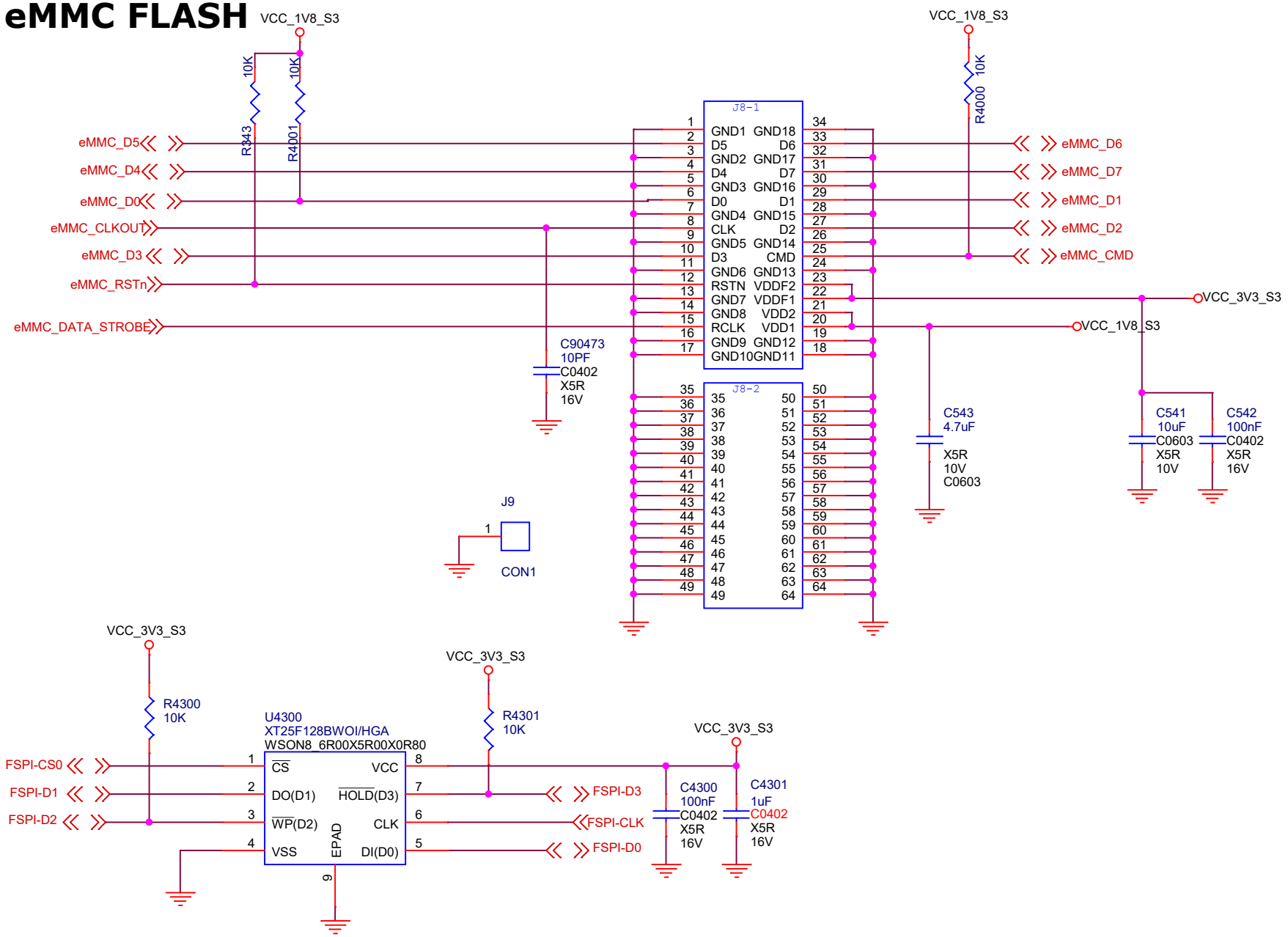


| Size | Title: | REV |
|---|---|---|
| A4 | ROCK 5B | 1.423 |
| | Page Name: eMMC FLASH | |
| Date: Wednesday, March 01, 2023 | Sheet 25 of 32 | |

# TF CARD

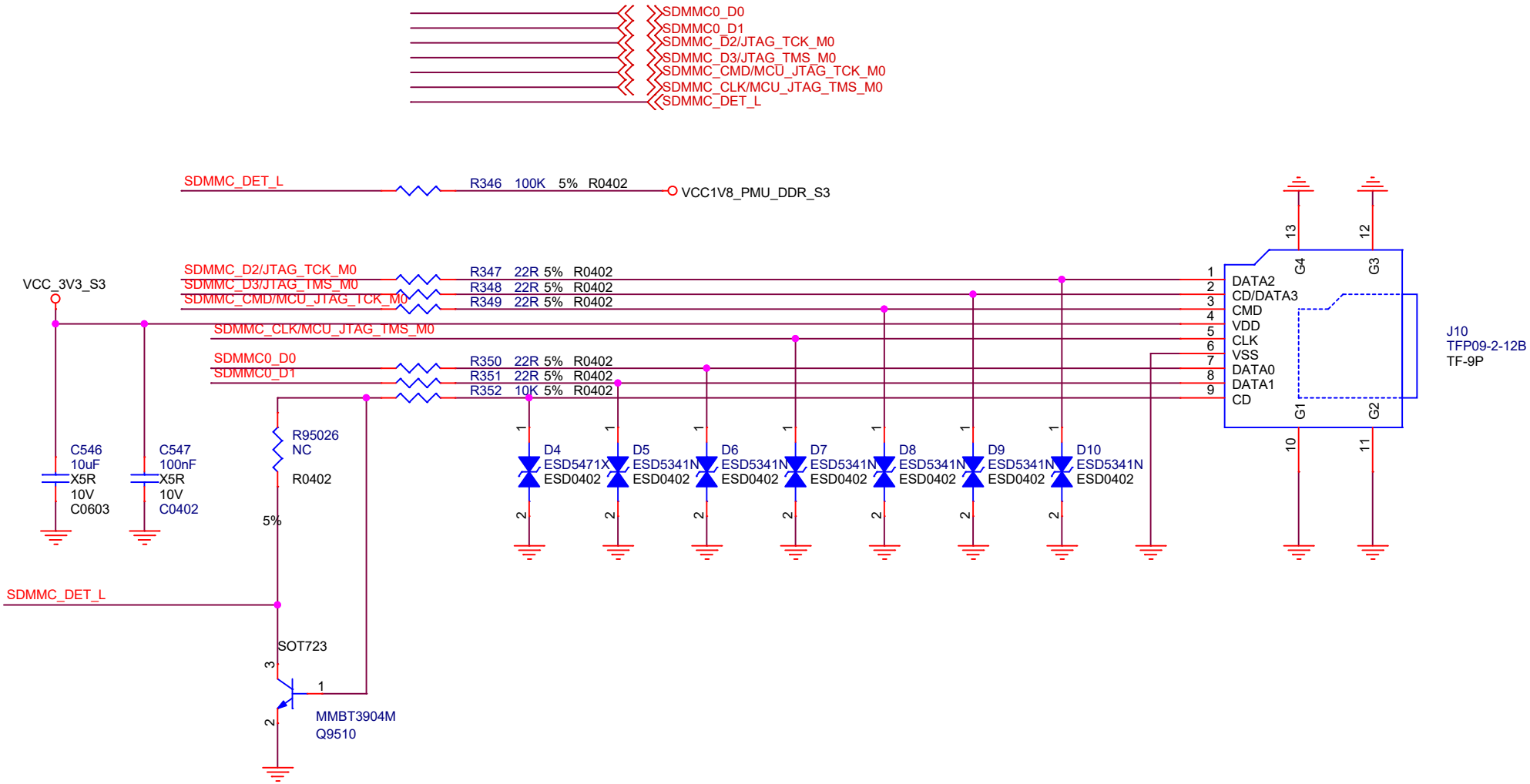


| Size | Title: ROCK 5B | REV |
|---|---|---|
| A4 | Page Name: TF CARD | 1.423 |
| Date: Wednesday, March 01, 2023 | Sheet 26 of 32 | |

# USB2.0

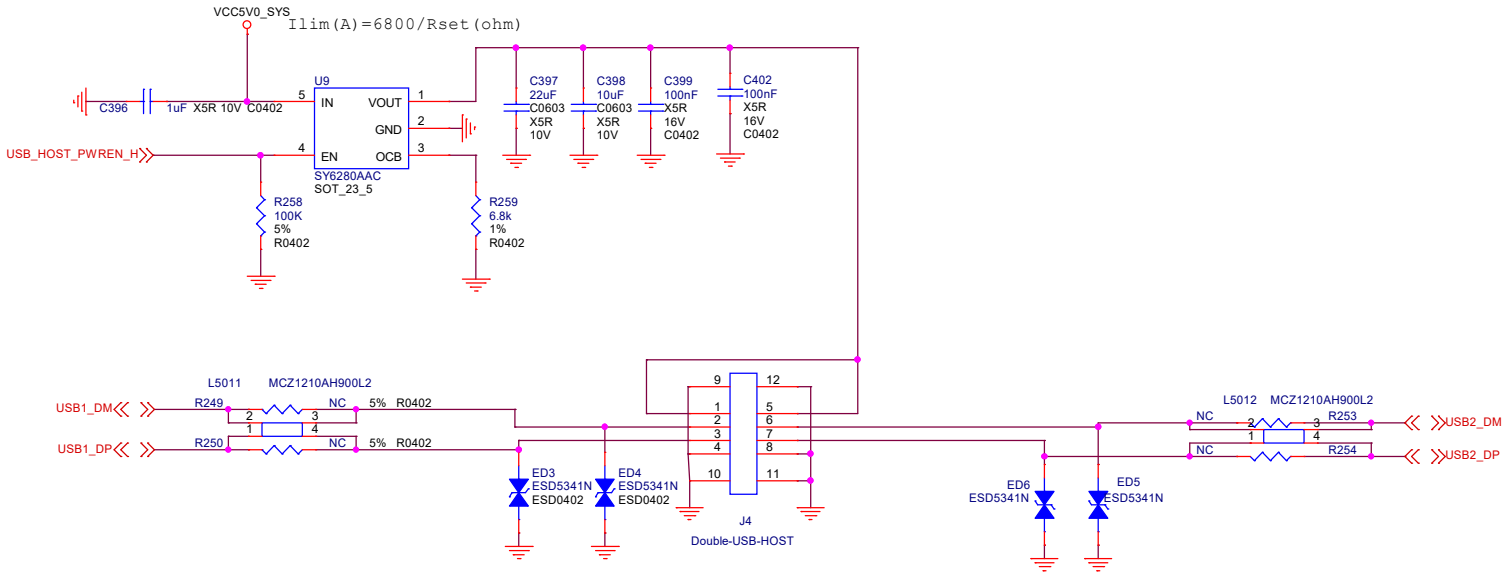


| | | |
|---|---|---|
| Size A3 | Title: ROCK 5B | REV 1.423 |
| | Page Name: USB2.0 | |
| Date: Wednesday, March 01, 2023 | Sheet 27 of 32 | |

# USB3.0 HOST PORT

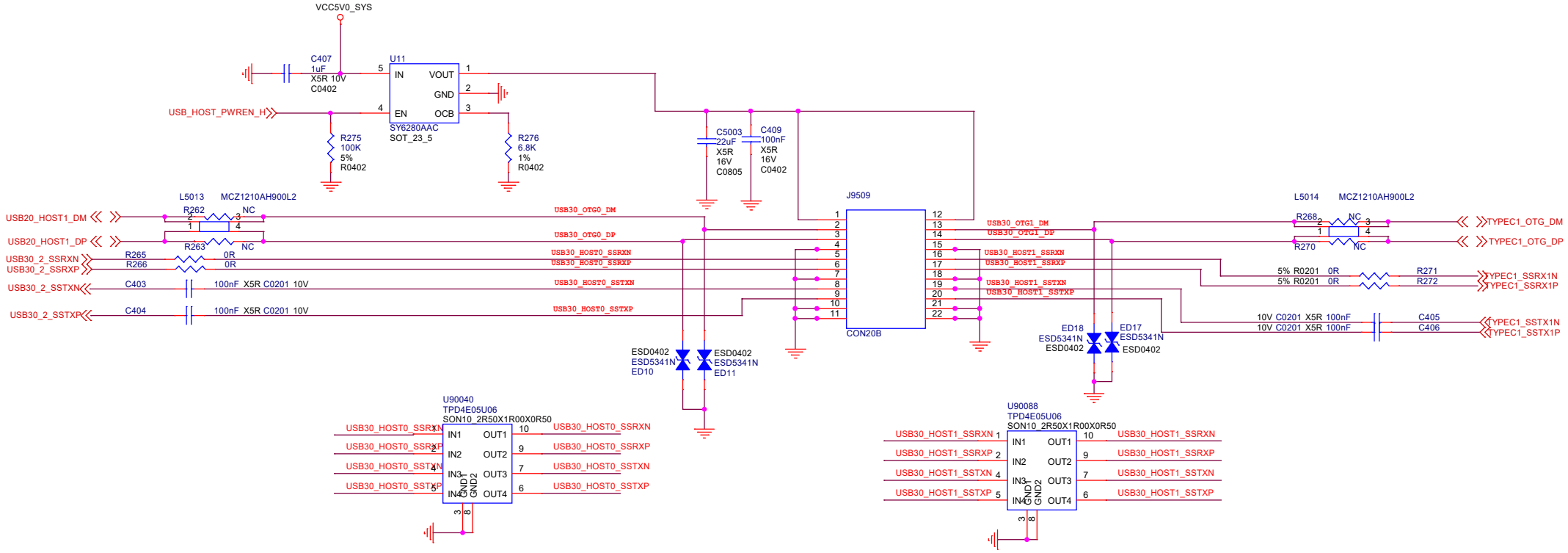


| Size | Title: | REV |
|---|---|---|
| A3 | ROCK 5B | 1.423 |
| | Page Name: USB3.0 HOST PORT | |
| Date: Wednesday, March 01, 2023 | Sheet 28 of 32 | |

# Type-C PORT

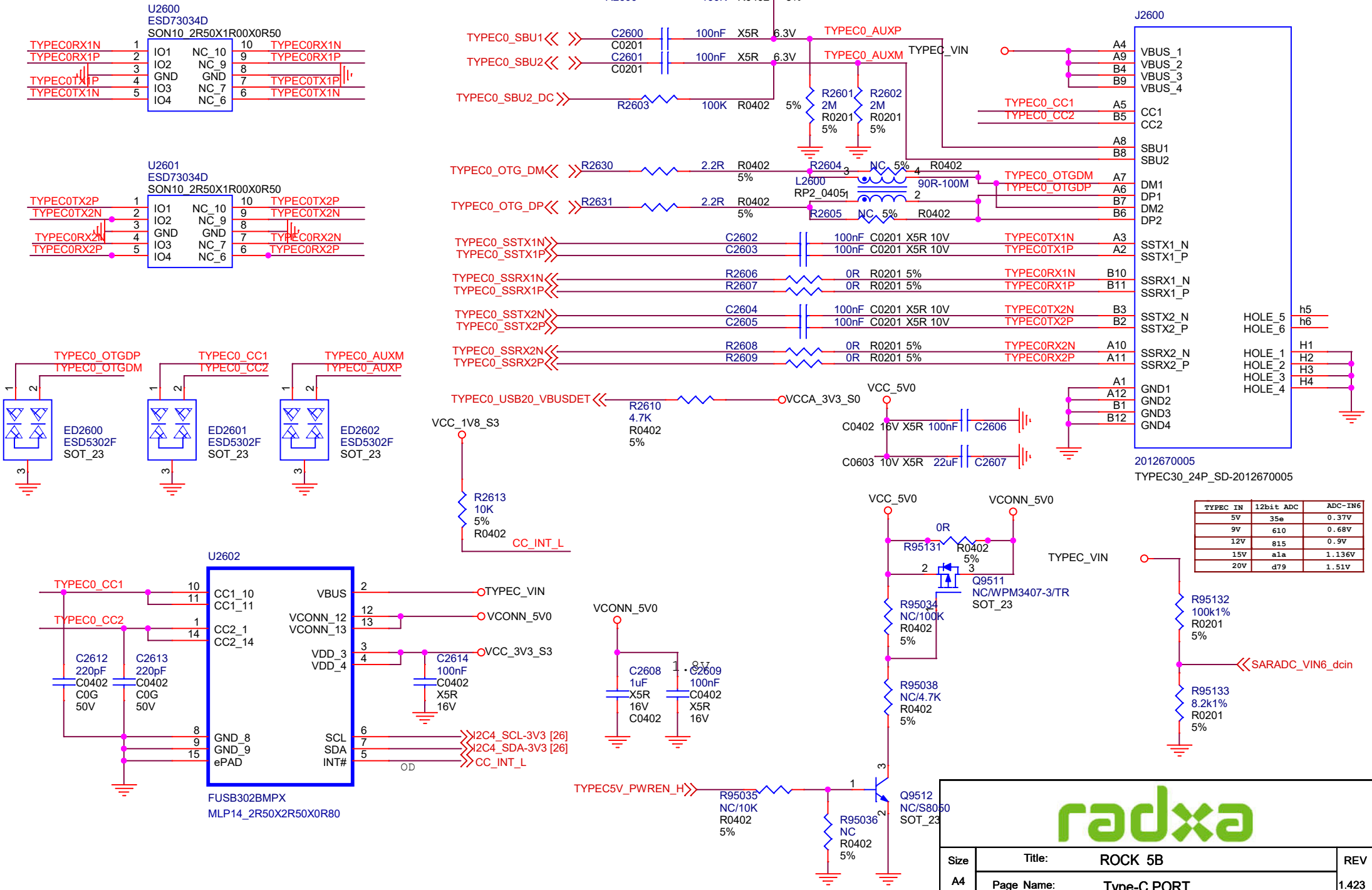


| TYPEC IN | 12bit ADC | ADC-IN6 |
|---|---|---|
| 5V | 35e | 0.37V |
| 9V | 610 | 0.68V |
| 12V | 815 | 0.9V |
| 15V | a1a | 1.136V |
| 20V | d79 | 1.51V |

radxa

| Size | Title: | REV |
|---|---|---|
| A4 | ROCK 5B | 1.423 |
| | Page Name: Type-C PORT | |
| Date: Wednesday, March 01, 2023 | Sheet 29 of 32 | |

# CAM

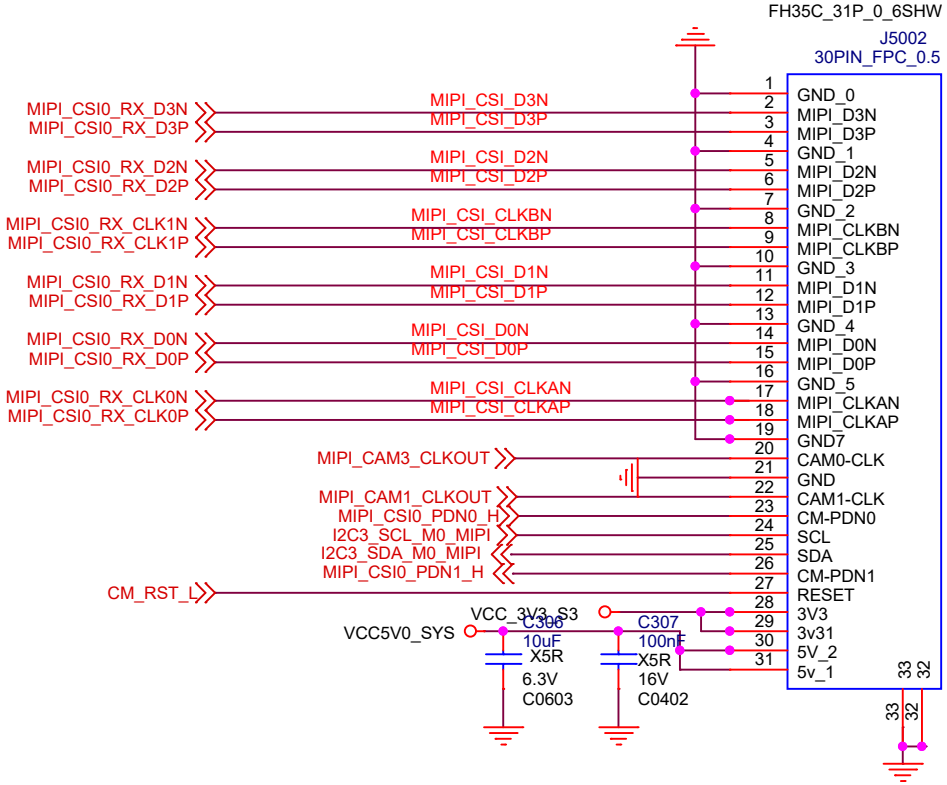


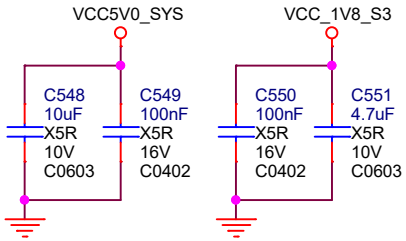


| Size | Title: ROCK 5B | REV |
|---|---|---|
| A4 | Page Name: CAM | 1.423 |
| Date: Wednesday, March 01, 2023 | Sheet 30 of 32 | |

# HDMI 1

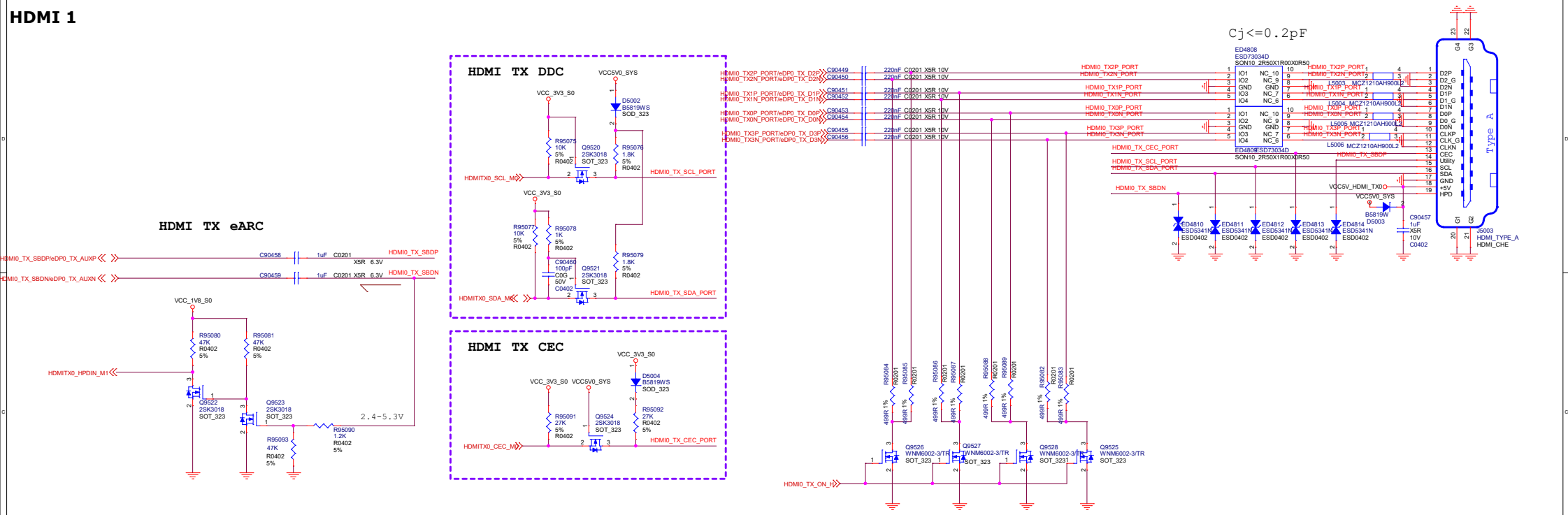


# HDMI 2

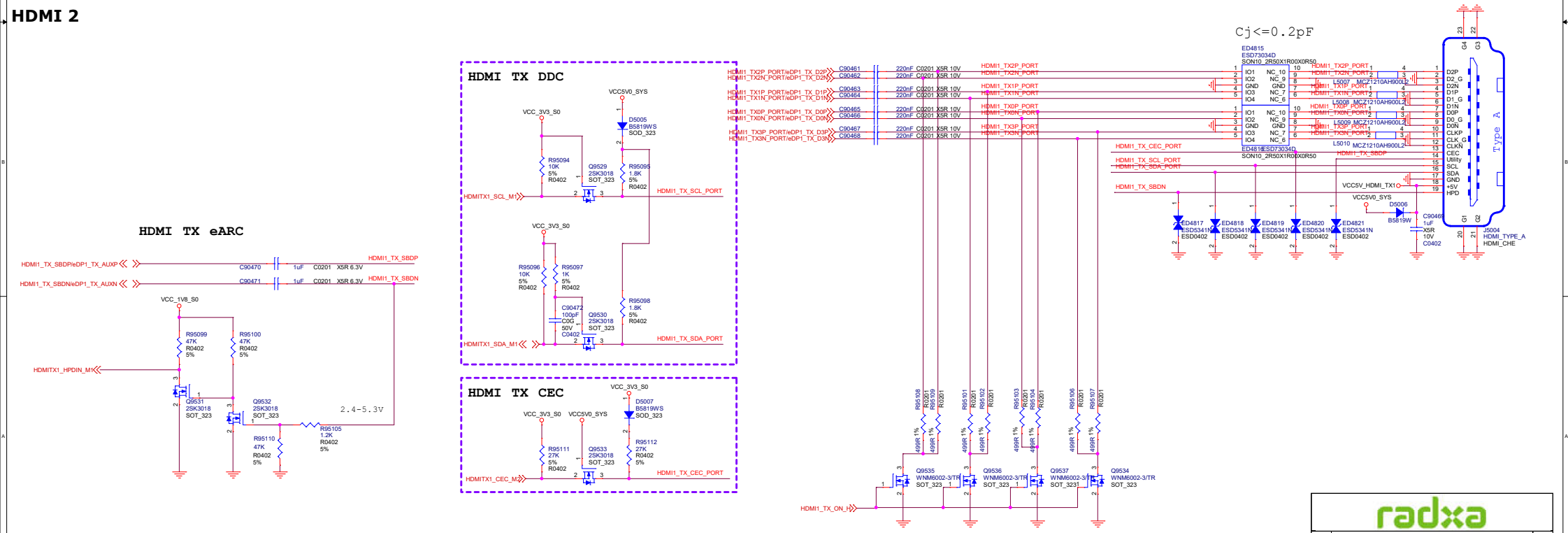


radxa

| Size | Title: ROCK 5B | REV |
|---|---|---|
| A2 | Page Name: HDMI | 1.423 |
| Date: Wednesday, March 01, 2023 | Sheet 31 of 32 | |

# MIPI DPHY1 TX

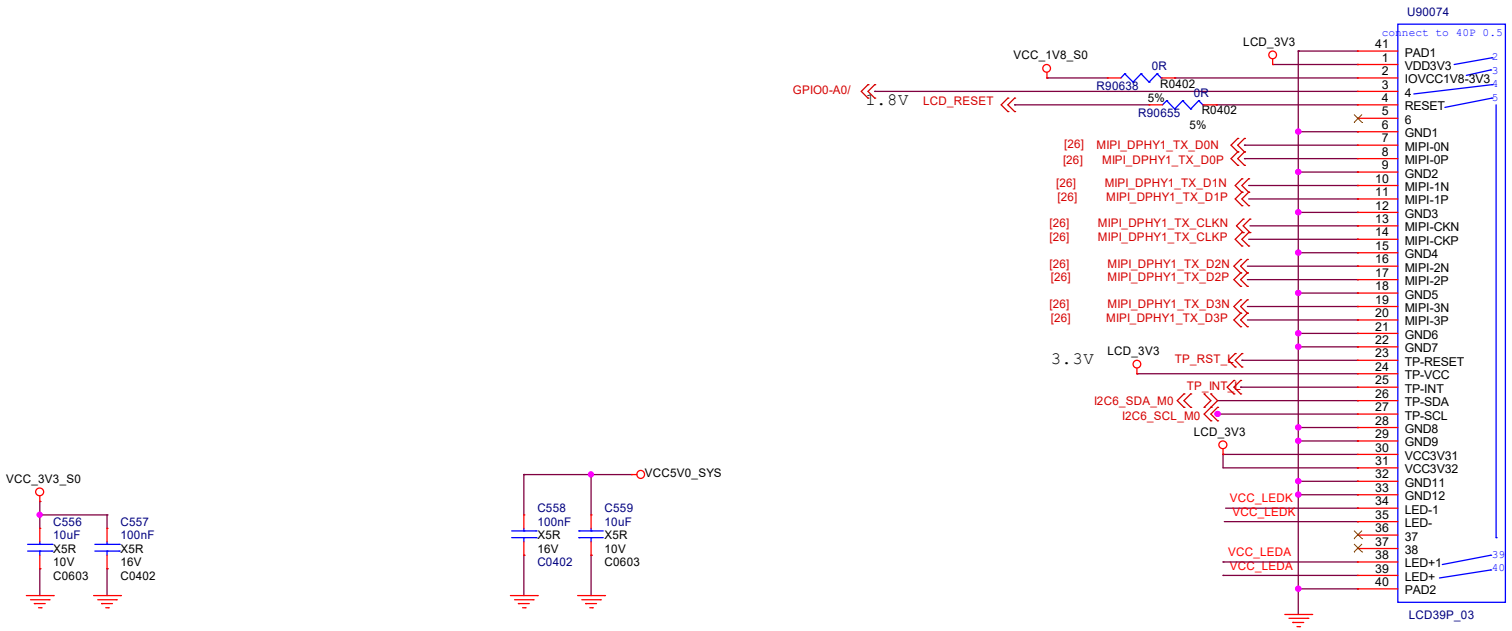


# LCD

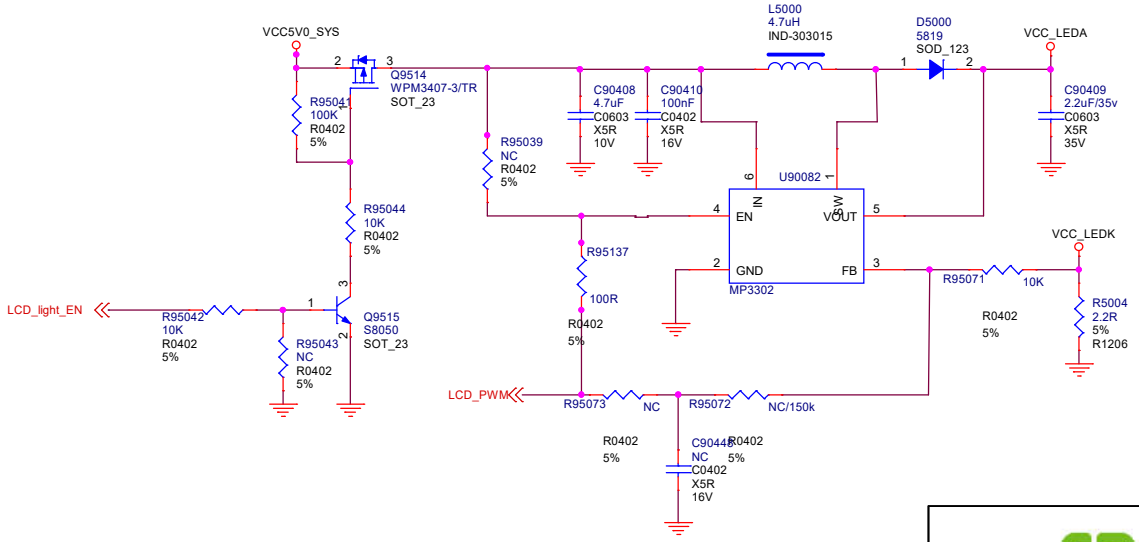


| Size | Title: ROCK 5B | REV |
|---|---|---|
| A3 | Page Name: MIPI DPHY1 TX | 1.423 |
| Date: Wednesday, March 01, 2023 | Sheet 32 of 32 | |